p - ISSN 2414-4797

e - ISSN 2523-4242

МІНІСТЕРСТВО ОСВІТИ І НАУКИ УКРАЇНИ

# НАУКОВИЙ ЧАСОПИС

## НАЦІОНАЛЬНОГО ПЕДАГОГІЧНОГО УНІВЕРСИТЕТУ ІМЕНІ М. П. ДРАГОМАНОВА

***Серія 9***

Сучасні тенденції розвитку мов

***Випуск 17***

Київ
Видавництво НПУ імені М. П. Драгоманова
2018

p - ISSN 2523-4242

e - ISSN 2414-4797

MINISTRY OF EDUCATION AND SCIENCE OF UKRAINE

# SCIENTIFIC JOURNAL

## OF NATIONAL PEDAGOGICAL DRAGOMANOV UNIVERSITY

***Series 9***

Current Trends in Language Development

***Vol. 17***

Kyiv

National Pedagogical Dragomanov University Publishing House

2018

**УДК 81(06)**
**ББК 81.2уа5**
**Н 34**

**ФАХОВЕ ВИДАННЯ**
**затверджено наказом Міністерства освіти і науки України**
**від 11.07.2016 р. № 820** *(філологічні науки)*

Державний комітет телебачення і радіомовлення України
Свідоцтво про державну реєстрацію друкованого засобу масової інформації Серія КВ № 8815 від 01.06.2004 р.

*Схвалено рішенням Вченої ради НПУ імені М. П. Драгоманова*
*(протокол № 14 від 26 червня 2018 р.)*

## Редакційна рада:

*В. П. Андрущенко* – доктор філософських наук, професор, член-кореспондент НАН України, академік НАПН України, ректор НПУ імені М. П. Драгоманова (*голова Редакційної ради*);
*В. П. Бех* – доктор філософських наук, професор;
*В. І. Бондар* – доктор педагогічних наук, професор, академік НАПН України;
*І. І. Дробот* – доктор історичних наук, професор;
*В. Б. Євтух* – доктор історичних наук, професор, член-кореспондент НАН України;
*А. А. Зернецька* – доктор філологічних наук, професор;
*М. І. Жалдак* – доктор педагогічних наук, професор, академік НАПН України;
*Л. І. Мацько* – доктор філологічних наук, професор, академік НАПН України;
*О. С. Падалка* – доктор педагогічних наук, професор, член-кореспондент НАПН України;
*В. М. Синьов* – доктор педагогічних наук, професор, академік НАПН України;
*Г. М. Торбін* – доктор фізико-математичних наук, професор (*заступник голови Редакційної ради*);
*М. І. Шут* – доктор фізико-математичних наук, професор, член-кореспондент НАПН України.

## Редакційна колегія:

*Я. Вежбинські* – доктор філологічних наук, професор (Республіка Польща);
*А. А. Зернецька* – доктор філологічних наук, професор;
*Л. П. Іванова* – доктор філологічних наук, професор;
*А. В. Корольова* – доктор філологічних наук, професор *(відповідальний редактор)*;
*Ю. В. Кравцова* – доктор філологічних наук, професор;
*Н. Є. Леміш* доктор філологічних наук, професор;
*О. І. Леута* – доктор філологічних наук, професор;
*Ф. Ж. Р. де Мендоса Ібан'єс* доктор філософії з лінгвістики, професор (Королівство Іспанія);
*Ф. О. Нікітіна* – доктор філологічних наук, професор;
*М. Я. Плющ* – доктор філологічних наук, професор;
*Ю. Ю. Романовська* – кандидат філологічних наук, професор;
*М. С. П. Кервел* – доктор філософії з лінгвістики (Королівство Іспанія);
*Н. О. Стефанова* – кандидат філологічних наук, доцент;
*С. Темчін* – доктор філологічних наук, професор (Литовська Республіка);
*Т. С. Толчеєва* – доктор філологічних наук, професор;
*П. Ю. Шопін* – доктор філософії з лінгвістики;
*С. М. Щербина* – кандидат філологічних наук, доцент;
*Я. В. Хижун* – кандидат філологічних наук, доцент *(відповідальний секретар)*.

**Н 34** **НАУКОВИЙ ЧАСОПИС** НАЦІОНАЛЬНОГО ПЕДАГОГІЧНОГО УНІВЕРСИТЕТУ ІМЕНІ М. П. ДРАГОМАНОВА. *Серія 9. Сучасні тенденції розвитку мов* : збірник наукових праць / за науковою ред. проф. А. В. Корольової. – Київ : Вид-во НПУ імені М. П. Драгоманова, 2018. – Випуск 17. – 170 с.

Науковий часопис містить праці докторантів, аспірантів, професорсько-викладацького складу мовознавчих кафедр НПУ імені М. П. Драгоманова та інших наукових осередків в Україні та за її межами з актуальних проблем сучасної лінгвістики.

Для викладачів, аспірантів, студентів філологічних факультетів, учителів-словесників.

**УДК 81(06)**
**ББК 81.2уа5**

© Автори статей, 2018
© Редакційна рада та редакційна колегія, 2018
© Вид-во НПУ імені М. П. Драгоманова, 2018

**UDC 81(06)**
**LBC 81.2ya5**
**H 34**

**PROFESSIONAL EDITION**
**approved by the order of the Ministry of Education and Science of Ukraine**
**dated of July 07, 2016 No. 820** *(Philological Sciences)*

State Committee for Television and Radio Broadcasting of Ukraine
Certificate of State Registration of the Printed Mass Media Series KV No. 8815 dated of June 01, 2004

*Approved by the decision of the Academic Council of the NPDU*
*(minutes No 14, dated of June 26, 2018)*

**Editorial Board Council:**

*V. P. Andrushchenko* – Doctor of Sciences (Philosophy), Professor, Corresponding Member of the National Academy of Sciences of Ukraine, Academician of the National Academy of Sciences of Ukraine, Rector of the NPDU *(Editor-in-Chief of the Editorial Board Council)*
*V. P. Bekh* – Doctor of Sciences (Philosophy), Professor
*V. I. Bondar* – Doctor of Sciences (Pedagogics), Professor, Academician of the National Academy of Sciences of Ukraine
*I. I. Drobot* – Doctor of Sciences (History), Professor
*V. B. Yevtukh* – Doctor of Sciences (History), Professor, Corresponding Member of the National Academy of Sciences of Ukraine
*A. A. Zernetska* – Doctor of Sciences (Philology), Professor
*M. I. Zhaldak* – Doctor of Sciences (Pedagogics), Professor, Academician of the National Academy of Sciences of Ukraine
*L. I. Matsko* – Doctor of Sciences (Philology), Professor, Academician of the National Academy of Sciences of Ukraine
*O. S. Padalka* – Doctor of Sciences (History), Professor, Corresponding Member of the National Academy of Sciences of Ukraine
*V. M. Sinyov* – Doctor of Sciences (Pedagogics), Professor, Academician of the National Academy of Sciences of Ukraine
*G. M. Torbin* – Doctor of Sciences (Physics and Mathematics), Professor *(Deputy Editor of the Editorial Board Council)*
*M. I. Shut* – Doctor of Sciences (Physics and Mathematics), Professor, Corresponding Member of the National Academy of Sciences of Ukraine

**Editorial Board Committee:**

*Ya. Wierzbicki* – Doctor of Sciences (Philology), Professor (Republic of Poland)
*A. A. Zernetska* – Doctor of Sciences (Philology), Professor
*L. P. Ivanova* – Doctor of Sciences (Philology), Professor
*A. V. Korolyova* – Doctor of Sciences (Philology), Professor *(Editor-in-Chief of the Editorial Board Committee)*
*Yu. V. Kravtsova* – Doctor of Sciences (Philology), Professor
*N. Ye. Lemish* – Doctor of Sciences (Philology), Professor
*O. I. Leuta* – Doctor of Sciences (Philology), Professor
*F. R. de Mendoza* – Doctor of Philosophy (Linguistics), Professor (Kingdom of Spain)
*F. O. Nikitina* – Doctor of Sciences (Philology), Professor
*M. Ya. Plyushch* – Doctor of Sciences (Philology), Professor
*Yu. Yu. Romanovska* – Candidate of Sciences (Philology), Professor
*M. S. P. Cervel* – Doctor of Philosophy (Linguistics) (Kingdom of Spain)
*N. O. Stefanova* – Candidate of Sciences (Philology), Associate Professor
*S. Temchin* Doctor of Sciences (Philology), Professor (Republic of Lithuania)
*T. S. Tolcheyeva* – Doctor of Sciences (Philology), Professor
*P. Yu. Shopin* – Doctor of Philosophy (Linguistics)
*S. M. Shcherbyna* – Candidate of Sciences (Philology), Associate Professor
*Ya. V. Khyzhun* – Candidate of Sciences (Philology), Associate Professor *(Executive Secretary)*

**H 34** **SCIENTIFIC JOURNAL** OF NATIONAL PEDAGOGICAL DRAGOMANOV UNIVERSITY. *Series No. 9. Current Trends in Language Development :* collection of scientific works / scientific ed. of prof. A. V. Korolyova. – Kyiv : Publishing House of NPDU, 2018. – Vol. 17. – 170 p.

The scientific journal contains the works of doctoral students, post-graduate students, professors and lecturers of the linguistic departments of the NPDU and other research centres in Ukraine and abroad concerning topical problems of Slavic, Roman, Germanic and Oriental linguistics.

For teachers, post-graduate students, students of philological faculties, teachers-speakers.

**UDC 81(06)**
**LBC 81.2ya5**

© Authors of articles, 2018
© Publishing House of NPDU, 2018
© Editorial Board Council, 2018

**DOI:** https://doi.org/10.31392/NPU-nc.series9.2018.17.01
**UDC:** 81'373.612.2:165.194

**Nadiya V. Borodiichuk**
National Pedagogical Dragomanov University, Kyiv, Ukraine

# COGNITIVE MECHANISM OF ANALOGY AND ITS ROLE IN PROCESSES OF PRIMARY METAPHOR CREATION

**Bibliographic Description:**

Borodiichuk, N. V. (2018). Cognitive Mechanism of Analogy and its Role in Processes of Primary Metaphor Creation. *Scientific Journal of National Pedagogical Dragomanov University. Series 9. Current Trends in Language Development*. K. 17. 5–18. DOI: https://doi.org/10.31392/NPU-nc.series9.2018.17.01

***Abstract***

*The article deals with the problem of the cognitive nature of metaphor formed in the medium of mythological consciousness of the primitive human. It is supposed that such the main features of the mythological thinking as sensory concreteness and inability to form abstract notions caused the nature of the primary metaphor which was formed through the cognitive mechanism of analogy the surrounding objects and phenomena, and the inner mental states of the human – this metaphor was not linguistic, but concrete and sensory. It is ascertained that the direction of metaphorization in the primitive consciousness was inverted to modern one, because the modern people mind uses more intelligible concrete concepts to express abstract concepts, but the primitive humans conceiving themselves as a part of the nature and understanding their inner world as the outer one projected their inner states, which are comprehended as abstract now, onto the natural phenomena, which can be perceived through the organs of sense. It is argued that formation of critical abstract thinking is related with the development of the human cognitive abilities, what caused the metaphorization veer and also the transition from the mythological mind to linguistic one. It is analyzed three approaches to solving the problem of the relation between language and myth where an important argument was the metaphoricity both of thinking and language: 1) the linguistic theory of myth by M. Müller according to which the loss initial sense of the linguistic metaphor generated myth; 2) the theory of myth based not on the linguistic metaphor, but on the concrete sensory analogy of the real objects and human perceptions (E. Tylor, A. Potebnya); 3) Neo-Kantian theory by E. Cassirer which postulates the simultaneous development of language and myth which have the common sources. It is proved that metaphoricity is inherent in the human mind of every historical period, because the linguistic metaphor is based on the cognitive one, that is the latter makes it possible to comprehend the world and ourselves in this world and express the obtained knowledge by means of language. At the same time, metaphoricity and abstractness of thinking are harmonious processes which provides the productive cognizing of the world and the creative working its results out through the fixation of them in the linguistic forms.*

***Keywords:*** *primary metaphor, mythological consciousness, cognitive mechanism of analogy, linguistic metaphor, cognitive metaphor.*

***1. Introduction.***

Metaphor as the main object of metaphorology (Yu. V. Kravtsova) at the current stage of its development is being studied actively with the tide of cognitive linguistics, which representatives (G. Lakoff, M. Johnson, Z. Kövecses, A. Cienki, B. Rudzka-Ostyn, M. Turner, G. Fauconnier et al.) claim that the metaphorical "linguistic expressions (i.e., ways of talking) make explicit, or are manifestations of, the conceptual metaphors (i.e., ways of thinking)" (Kövecses 2010: 7), as well the conceptual metaphor "can be seen as a key instrument not only in producing new words and expressions but also in organizing human thought" (Kövecses 2010: xii). Due to the fact that the human psyche and therefore the ways of human thinking have undergone phylogenetic changes since the time of primitive society when primitive consciousness began comprehending the world and itself as a part of this world and then expressing the human ideas about the objective reality through the language forms (A. Losev, G. Vico, E. Cassirer et al.), we can suppose that the mechanisms of metaphor creation have also undergone transformation.

Various approaches to conceptual metaphor (the general theory of metaphor by G. Lakoff and M. Johnson, the theory of conceptual integration by G. Fauconnier and M. Turner, cognitive poetics by R. Tsur, M. Freeman, Z. Kövecses et al.) agree on that "the locus of metaphor is not in language at all, but in the way we conceptualize one mental domain in terms of another" (Lakoff 1993: 203), moreover "conceptual metaphors typically employ a more abstract concept as target and a more concrete or physical concept as their source", because "if we want to fully understand an abstract concept, we are better off using another concept that is more concrete, physical, or tangible than the abstract target concept for this purpose. Our experiences with the physical world serve as a natural and logical foundation for the comprehension of more abstract domains" (Kövecses 2010: 7), thereby, "many elements of target concepts come from source domains and are not preexisting" (Kövecses 2010: 9).

This phenomenon is explained with the idea of embodied mind under which "an embodied concept is a neural structure that is actually part of, or makes use of, the sensorimotor system of our brains. Much of conceptual inference is, therefore, sensorimotor inference" (Lakoff, Johnson 1999: 20), that is why people conceptualize the world and themselves through the embodied experience of the world and themselves in this world. Such "abstract ideas, like love, life, and the pursuit of happiness, are understood through the conceptual projection of physical experience. In other words, we cannot think abstractly without thinking metaphorically" (Freeman 2000: 266). Thus, according to "the embodiment hypothesis, metaphors may serve as conduits that link sensorimotor experience with abstract concepts" (Holyoak, Stamenkovic 2018: 656).

Although there are some points of view arguing that "abstract terms are not metaphorical, nor is metaphor comprehension embodied" (Kompa 2017: 206), we are positive of that metaphoricity and abstractedness of human mind are closely related and determined by physical experience since abstract concepts are comprehended and expressed through the means of language, first and foremost, by virtue of the conceptual metaphor, which is a product of abstract thinking and created on the base of specific mechanisms.

Just as the creation of metaphor is a cognitive process, on the one hand, and the linguistic one, on the other hand, so it provides the opportunity to reconstruct the mechanisms of the primitive human thinking as well as of current one. The aim of the article is revealing of cognitive mechanisms of the primary metaphor creation.

***2. Intuitive and Sensory Sphere of the Primary Metaphor Creation.***

Consciousness of the primitive human is defined (A. Losev, G. Vico, E. Cassirer, J. Frazer et al.) as mythological which is characterized by incorporated, prelogical thinking,

that is the primitive human equated subject and object of perception, natural and cultural phenomena, did not distinguish part-to-whole relations and also causal links (the next event could be the reason for the previous one, simultaneous events could have some causal link), that is why "the world view of the prelogical mind is that everything could hold anything", there is hence prerational, sensory character of the mythological consciousness, that is abstractions undergo sensory objectification (Timofeev, Petrov 2010: 146–147).

According to A. Losev, the basic nature of mythological mind is that if humans do not separate themselves from nature and conceive surroundings as sensory as themselves, they do not oppose their thought to surroundings and every abstract thought which reflects reality is the reality itself for mythological mind with all its sensory properties as alive beings or inanimate things (Losev 1964: 458). It follows that primitive consciousness did not discern abstract from material, that is why did not aspire to express abstract concepts using more easily understood concrete concepts, because abstract was conceived as sensory. It gives an explanation to cognitive nature of the primary metaphor which is based on identity of an object and thought about it; if the thought about some object or phenomenon arises, this object or phenomenon really exist for primitive human.

Corroboration of these theses can be found in the works of J. Ortega y Gasset who claims that mind unable to abstract thoughts would not distinguish metaphor as a finished result from metaphorical thought as a process (Ortega y Gasset 1990: 69). The primitive human mind was exactly like that because that notions which modern people understand as metaphorical were understood as absolutely real by humans of that evolutionary stage.

Researcher supposes that metaphor needs realization of its duality since we deliberately misuse a name (Ortega y Gasset 1990: 71), that is why metaphor functions not only to give a name or explicate unknown phenomena, but also to comprehend them. In his opinion, metaphor "is needed not only to make accessible our thought for other people by virtue of the obtained name, but to make an object accessible for our mind. Metaphor is not only the expressive means, metaphor is also the important means of thinking" (Ortega y Gasset 1990: 71), "through which we manage to reach the remotest areas of our conceptual field. Objects close to us, which can be easily comprehended, make mind available to reach remote concepts" (Ortega y Gasset 1990: 72). As we can see, J. Ortega y Gasset endeavours to explain the mechanisms of metaphor creation which are, indeed, cognitive.

Probably, the primitive humans thought in the same way to comprehend that notions which had arisen on the periphery of their consciousness, but it already was the way to comprehend the abstract concepts since at first human mind tried to seize the concrete things which surrounded the human and to conceptualize them – these concepts form the oldest layer of human consciousness. That is why metaphor becomes increasingly necessary because of that the human mind moves away from concrete things of daily life (Ortega y Gasset 1990: 75).

Modern people create metaphor deliberately to designate new notions which are difficult to describe by available language means or use already formed metaphorical models to name notions comprehended long ago, at the same time they can modify verbal forms which express these basic models formed when primitive humans began feeling the necessity to reflect not only the objective world, but also abstract one, because they were overfull with various impression and emotions. That means the primary metaphors were creating not so much consciously as intuitive and sensory, through the cognitive mechanism of various analogy with the world of objective notions.

***3. Mythological Nature of Cognitive Mechanism of Analogy as the Basis of Primary Metaphor Creation.***

Abstractness as a cognitive ability of the primitive human mind should be understood conditionally because of the peculiarities of the primitive psyche. According to C. Jung, "myths, first and foremost, are the mental phenomena expressing the deep essence of the soul", because the primitive humans were not "inclined to explain objectively the most obvious things", that is why they aspired "to adapt all external experience to the mental events" (Jung 1991 URL: http://gtmarket.ru/laboratory/basis/4229/4232). That is myth arises when the existence of unconscious as a part of psyche has not realized by the primitive humans yet and they projected the state of their unconscious onto the surroundings; thus the inner world of the primitive human (which was understood as the outer one) is expressed through mythology: "mythologized natural processes are … symbolical expressions of the inner and unconscious drama of the soul. It is perceived by human mind through projections, that means it is reflected in the mirror of natural events" (Jung 1991 URL: http://gtmarket.ru/laboratory/basis/4229/4232).

These thoughts of C. Jung afford ground for claiming that analogy as a cognitive mechanism of the primeval metaphor is like inverted to the modern one; if nowadays the source domain of the cognitive metaphor contains more concrete concepts some elements of which are mapped onto elements of the more abstract concepts of the target domain, then the primitive humans projected the state of their soul onto the surroundings, however, without understanding of that fact – it explains anthropomorphism and animism of myths. Human separation from nature and then from the tribal society, realization of the selfhood allegedly inverted the cognitive process of metaphorization, however, probably did not change already formed cognitive models of metaphors which were created on the basis of humans' ability to express their inner world through the natural phenomena.

And since the peculiar property of the primitive culture is syncretism, that is the union of different embryonic forms of reality comprehension contained in mythology (Timofeev, Petrov 2010: 147–148), the researchers resort to comparison between the mythological consciousness and other its forms (religious, scientific, philosophic, artistic), in particular to comparison of the cognitive mechanisms of metaphorization as the processes inherent in all these forms.

In this respect J. Ortega y Gasset mentions a poetical metaphor as "a total identity of two things" (Ortega y Gasset 1990: 73–74); this definition is similar to the principles of the primitive magic consciousness (J. Frazer, E. Cassirer): 1) principle "a part instead of the whole" which means a wizard believes that exerting influence on the part of some object he can have an influence on the whole object (ex., some magic actions with somebody's hair will have effect on this person completely); 2) principle of analogy which means that similar objects are understood as identical, that is the wizard is positive of doing some action will provoke the same natural phenomenon (ex., watering the ground will cause the rain) (Cassirer 1990: 38; Frazer 1986: 19–20).

However, these principles do not mean that the primitive human did not distinguish objects with similar features, because categorization of surrounding objects was necessary to survive (Lakoff, Johnson 1999: 17–18). Above mentioned principles obviously indicate that the primitive human comprehended some relations between the objects or phenomena, although was not able (did not have cognitive ability) to make right conclusions about these relations. Thus J. Frazer notices that conceiving themselves united with nature the primitive humans deemed if everything is connected and interdependent in nature, then some their actions will have corresponding results in nature, because they were not able to distinguish the objective causal link between some phenomena from the subjective associations which

were present only in their mind (Frazer 1986: 19–20), that is why magic is naive application of the simplest intellectual operations which are: association of ideas by similarity and association of ideas by contiguity (Frazer 1986: 58). These statements can be seen as the corroboration of supposition that the imaginary world was quite real for the primitive humans, feeling of analogy between the perception of reality through the sense organs and inaccessible for them abstract phenomena leaded to equation of these facts resulting as the primary metaphor.

G. Vico's thoughts about metaphorical nature of myth, poetry of the primitive human mind and its expression in the language attract particular attention. The philosopher understands history as a cyclical process which laws are analogical to the laws of a biological organism's development, that is why mythological epoch of human development corresponds to childhood period of an individual since the children's psyche is characterized by emotionality, fertile imagination, sensory concreteness, transfer of their qualities onto the surroundings etc. and these peculiarities are quite correspondent to the features of mythological mind. Children use their imagination to compensate for the lack of the objective knowledge; according to G. Vico, mythology forms in this manner: "the first people like children of the human race were unable to form intelligible generic notions, that is why they were forced to create poetic characters, that is fantastic genera or universals, to reduce to them as to some Patterns or ideal portraits all individual species similar to their genus" (Vico 1994: 87). Thus G. Vico claims that myth is a phenomenon inherent in the childhood of the human race, that is primitive society, however it is not fiction or ignorance but peculiar reality refraction through the lens of mythological consciousness. Modern people, according to G. Vico, are bereft of those abilities of the primitive consciousness which were the basis and the reason of mythogenesis: "[…] the nature of the human mind is already too far from those feelings because of numerous abstractness…, nowadays the nature prevented access to irrepressible Imagination of the first people whose consciousness was bereft of abstractness […], because they were absolutely immersed into sensations…; now we even cannot fancy how the first people, who set up the Pagan culture, thought" (Vico 1994: 134).

G. Vico claims that the primitive human mind was metaphorical and therefore poetical: "The first Poets imparted to the objects the nature of animated substances which owned only what they themselves were capable of, that is feeling and passion; in such a manner the first Poets changed the objects into the Myths and every metaphor became a little myth" (Vico 1994: 146). The philosopher writes that "all the languages have expressions which are transferred onto inanimate beings from the human body and its parts, from the human feelings and passions" (Vico 1994: 149).

The transfer of the human passions onto the natural phenomena is quite correlating with already mentioned thoughts of C. Jung about the mythological mind, because direction of metaphorization was not from the concrete to the abstract, but vice versa, although the abstract was conceived as concrete and sensory. Thus, according to G. Vico, "all the tropes […] were the expressive ways of the first Poetic Nations and, by nature, they had literal meaning. However, development of the human mind resulted into arising of language, and the words having denoted the abstract forms and generic notions which had linked parts with their whole became figurative or metaphorical according to the expressive ways of the primitive humans" (Vico 1994: 149). Hence the philosopher's statement about the initial arising of the poetic language and the further development of the prose language.

However, modern artistic mind and primitive mythological one are different by nature. According to E. Cassirer, in due course the tight relation between myth and language slackens, because "language does not belong to the field of myth, there is another force in it

from its origins – it is the force of logos", that is why "during the development of language the word more and more becomes only a sign of concept"; that is the transformation of language into a tool of thinking by means of which the concepts and judgements are expressed is only possible in case of loss by it of "the direct experience", "the initial concrete conceptual and emotional content" (Cassirer 1990: 41). Herewith the researcher notices when the word is used "with the purpose of the artistic expression", it "not only saves its initial descriptive force but also continually renovates it maintaining persistent palingenesis, emotional and spiritual dimensions", but this "new life" of the word is already "esthetically independent", "not related with myth", because the word expressed in poetry "is neither the mythological world of gods and demons nor the logical truth of the abstract denotations and relations. The world of poetry is […] the world of illusion and fantasy" (Cassirer 1990: 41–42). Hence the poetical creative work of a person who is able to abstract thinking provides for the deliberate fantasy formation and using of metaphors which are not already concrete and sensory as they were in the time of mythogenesis, but they still function as the means of feelings' expression.

Appurtenance of the myth to the sphere of poetry is also noticed in the works of A. Potebnya who claims that myth "is constituted with an image and meaning which relation is not needed to be proved as it is done in science, because it is directly persuasive, accepted at face value", that is why myth is a result of an act of consciousness, but it differs from the latter by the fact that it runs unconsciously (Potebnya 1989: 259). According to A. Potebnya, the difference between the myth and the later poetry consists in "the attitude of consciousness to the elements of both of them" since "the image and meaning of the myth are different, allegory of the image exists, but it is not realized by a subject, the image wholly (without getting dismembered) transfers to the meaning", then "the image of the later poetry is not more than the means of forming (realization) of the meaning, the means which get dismembered into its elements", so "the two parts of judgement (viz. image and meaning) are more similar by the mythological thinking, than by poetical one. Their differentiation leads from the myth to the poetry and then from the poetry to the prose and science" (Potebnya 1989: 259). As we can see, the artistic mind separated from mythological one when the human began understanding the difference between the sign and the signified: "The emergence of metaphor in the sense of heterogeneity of the image and meaning is a result of the myth's disappearance" (Potebnya 1989: 261), but in this case the metaphor lost its concrete sensuousness having become the means of conscious transfer of the features of the concrete concepts onto the abstract ones.

Thus, the primary metaphor inherent in mythological mind differs from the artistic metaphor by absence of the sensory concreteness in the latter, that is the mythological mind was not poetical in the modern sense, because poetry is just one of the properties of the mythological mind since the latter held the germs of all other forms of mind which afterwards separated, in particular the artistic one. Comparing the mythological fantasy with the artistic one A. Losev claims that "the mythological images were thought to be substantiated in the literal sense and were not the metaphor in the modern understanding whereas the artistic images are always understood just figuratively" (Losev 1964: 458). During the artwork the purposeful process of linguistic metaphorization or using of the linguistic forms reflecting knowledge formed through the cognitive metaphor take place consciously, and during the mythogenesis the cognitive mechanism of analogy comes about resulting as the metaphor creation.

Hereby "myth is a sensory belief rather than abstract" (Losev 1964: 457), but we should not oppose the mythological mind to the metaphorical thinking and understand the abstractness and metaphoricity of thinking as mutually exclusive. Metaphoricity is an

integral part of the human mind of every historical period, it is impossible neither to comprehend surroundings and ourselves, nor to express the results of this comprehension through the language without it. The evolution of the human mind did not deprive the metaphor of the main its mechanism, which is the mechanism of analogy, but provided people with higher creative level of knowledge of the world through the coexistence of the metaphorical and abstract thinking.

***4. Research Directions of the Cognitive Mechanism of Analogy as a Way of the Primary Metaphor Creation.***

The problem of the cognitive nature of the primary metaphor was studied within the discussion about the primacy of language in relation to myth or, contrariwise, the primacy of myth in relation to language. There were three research directions which propounded the next ideas: 1) formation of language preceded the arising of mythology (linguistic theory of myth by M. Müller, A. Kuhn, F. Wendorff, H. Usener et al.); 2) myth is a prelinguistic phenomenon which gained linguistic narrative forms and then the language manifested mythogenic potential (E. Tylor, A. Potebnya); 3) myth and language are interdependent phenomena which cause the formation of each other (E. Cassirer, J. Herder, F. Schelling).

***4.1. The Linguistic Theory of Myth*** arose in the middle of the XIX century and it was contiguous to the ideas of the comparative linguistics. According to this theory, myth is closely related with the language, because the latter is the most important factor of mythogenesis. It is focused on "the correlation between the semantics and metaphorical organization of the myth which discoordination ("obliteration" of the initial sense of the metaphors) was considered as the basis of mythogenesis" (Mozheyko 2003 URL: http://www.gumer.info/bogoslov_Buks/Philos/New_Dict/477.php). M. Müller, who is the founder of this theory, thought mythology to be the sickness of language: "Mythology like the poison of the ancient world is, in fact, the sickness of language. *Mythos* means the word that had been a name or attribute, but had time to assume more real existence" (Müller 2009: 8). The researcher thought that mythology is the special speech, ancient envelope of the language, that is the nature of myth was inferred from the particularities of thoughts' objectification in the language (Naydysh 2010: 215).

Metaphoricity is the common feature of myth and language, but, according to M. Müller, the metaphorical thinking preceded the mythological one, because the primitive humans perceived the surrounding objects as themselves and not having enough words to designate elements of the outer world they used the same words to name their inner states and the outer objects; the primitive humans "embraced with the same expression material and abstract notions" (Müller 1887: 28). Myth was formed when the initial (literal) sense of metaphor was lost: "*Eos* was the name of the sunrise colors until it became a goddess" (Müller 2009: 8).

V. Naydysh treats the approach of the linguistic theory of myth in the following way: "the primitive mythology is inferred from the fact that the initial designation of the abstract notions through the concrete features of phenomena can be realized only through the metaphor. That is the primitive human thought only metaphorically, in other words, poetically. There is no mythology at this stage. But after a while when the initial sense of metaphor was lost the metaphors began to be used without a clear understanding of those steps which had led up to their formation. In such way the primitive metaphorical thinking changed into the mythological one" (Naydysh 2010: 217). The researcher notices that the linguistic theory of myth postulates that the metaphorical thinking cannot coexist with the abstract one, because the sensory image is destroyed by abstraction, and makes conclusion that "the linguistic theory treated myth as a result not of progress, but of degradation of the human mentality, because "the sickness of language" is "the sickness of mind" at the same

time. Myth is not the expression of the peculiar "tension" of the primitive mind, but its weakening, lowering" (Naydysh 2010: 217).

The representatives of the linguistic theory of myth endeavored to study out what natural phenomena were so impressive for the primitive humans that they began divinizing the nature. These attempts established solar and atmospheric conceptions of myth (A. Kuhn, F. Wendorff et al.) which were directed to "search of that initial, imbued with emotions images of natural phenomena which were the basis for arising of myths. Under these conceptions the relation between myth and metaphor was proved not only by means of linguistics, but also psychologically, that is through the role of perception in the formation of sensory images and abstractions" (Naydysh 2010: 218). The researchers considered that characteristics of mythological gods were formed on the basis of visible images generated by astronomic and atmospheric phenomena which were "reflected in the human consciousness in form of imbued with emotions concepts. The result was the metaphors (which personified humans' features and were understandable for them) from which then (as a result of "the sickness of language") the mythological images were formed" (Naydysh 2010: 218).

Whereas W. Wundt, who turned the study of mythology to the tide of psychology, made a critical remark about attempts to bring mythology out of only one mental process which is conceptualization: "instead of taking into account all psychological processes […] they give preference to conceptualization" (Wundt 1914: 39). According to W. Wundt, consciousness is a complicated active system which is formed with a number of interrelated processes (intellectual, conative, emotional), and myth is the initial form of consciousness, that is why the researcher considered that the motive force of mythogenesis is not the conceptualization, but emotions: "the essential spring of mythological mind and behavior […] were not concepts, but affects which follow the concepts everywhere and penetrate into formation of concepts as the powerful stimulus of fantasy. The affects of fear and hope, desire and passion, love and hatred are the sources of myth spread everywhere. Certainly, they are always connected with concepts. But only they along breathe life into these concepts" (Wundt 1914: 40).

According to this view, the source of mithogenesis is not the cognitive sphere of the human consciousness, but emotional one. A. Losev notices that it is incorrect "to treat mythology as an attempt to explain or understand the nature and society by the primitive human", because "every explanation of the nature and society, even the most mythological, is already the result of cognition that differs from myth which fulfil any function with the exception of cognitive one […] mythology is not the explanation of nature, because the mythological explanation of nature already foresees the availability of mythology, that is why the explanatory function of mythology is secondary" (Losev 1964: 457–458). However, the content of myth is determined by association of the ideas and combination of various psychic elements of the complete system of consciousness.

H. Usener, who is considered to be the representative of the linguistic theory of myth, also reclined upon the tight relation between language and myth in his researches, however, in contrast to M. Müller, he treated this relation as the entirety of the system "myth – language", because he was sure that language and myth have common sources: "Ideas about spirits and gods arise not during the passive contemplation of discrete objects, but at the moments of especially active states of mind, in the periods of its tension and enervation. The language has same source", that is "intensification and concentration of the sensory experience generate both the language and myth" (Naydysh 2010: 225). Thus we can conclude that H. Usener abandoned himself to the idea about the primary nature of the language, but affirmed that language and myth have common sources.

***4.2. The Anthropological Theory of Myth*** is based on the critics of the linguistic theory of myth, especially of the statements formulated by M. Müller. Thus E. Tylor is positive of that mythological anthropomorphize of nature "cannot be reduced to the simple poetical fancies or to the simple metaphor, because these ideas are based on the extensive philosophy of nature, […] which was apprehend as quite real and serious" (Tylor 1989: 129-130). The researcher argues that "the mythology of the primitive societies is based on the real and perceptible analogy, and […] development of the verbal metaphor to myth refers to later periods of civilization". This implies that "material myth" is the initial and "verbal myth" is the secondary formation (Tylor 1989: 138). As we can see, E. Tylor makes an objection to the initial mythogenic nature of the verbal metaphor, that is linguistic metaphor, but he accentuates on the importance of the cognitive process (or cognitive mechanism) of analogy both for the modern human mind and for primitive one: "the analogy is still the main tool and at the earlier stages of culture development its influence was infinite" (Tylor 1989: 136-137). "No matter how deeply language underlies the understanding of life, but the straight comparisons of an object with another object or an action with another action are considerably deeper" (Tylor 1989: 138). The issue here is the mythogenic potential of the cognitive metaphor which is based on the analogue thinking (that is cognitive power) of the primitive human.

A. Potebnya also disagrees with M. Müller, referring to H. Spencer the researcher argues that, firstly, assumptions that "high level of human mind and its further lowering are unmotivated and contradicting the theory of evolutional development of the human mind" and, secondly, the statement that "myth is the sickness of language in an unconscious state and therefore the initial word meaning (and then the thought related to it) is considerably higher than myth" contradicts a statement of M. Müller "about the initial concreteness of language", because it would mean that at first the humans were able to think abstractly and name the abstract concepts directly, but then for no apparent reason they began depriving the words of abstractness using concrete and sensory analogies instead (Potebnya 1989: 254-256).

As J. Ortega y Gasset, A. Potebnya claims that "metaphoricity of expression, properly, arises with the human's ability to comprehend, retain the difference between the subjective source of the thought cognizing the world and its movement toward this cognition", because what we understand "just as the comparison was the truth for the humans in the period of mythological mind until they recognize only insignificant differences between the objects under comparison", and this disproves the M. Müller's thought "about forgetting of the main meanings of the words […] as the source of myths" (Potebnya 1989: 262). A. Potebnya is speaking here about metaphor as a hidden comparison which is realized, and that is why as if it is impossible for the mythological mind which did not distinguished the subject and the object equating the object and the thought about it, however exactly the latter generates the primary mythological metaphor which disappearing caused by the realization the differences between the objects under comparison (the objects of analogy) and the thought about them indicates the forward motion of the human mind from the sensory imagery to the critical abstractness.

***4.3. Neo-Kantian Interpretation of Myth.***

E. Cassirer considers both language and myth as the symbolical forms of culture. The philosopher emphasizes tight relation between the mythological and linguistic worlds which is based, in his opinion, on the metaphorical thinking: "No matter how much myth and language differ in content, they both, as it turns out, have in common the same conceptual form. This form can be defined as the metaphorical thinking" (Cassirer 1990: 33). Linguistic and mythological metaphors have common origin: "there is the completion of the same inner process both in the sounds of language and in the primitive mythological images: both of

them relieve the inner tension, express mental experience through the objectified forms and figures", that is their origin in rooted in "the concentration of the sensory experience" (Cassirer 1990: 36). At the same time E. Cassirer, on the one hand, speaks about metaphor "as the deliberate transfer of some notion onto other sphere, that is onto other notion", however, on the other hand, he notices that this process becomes possible when the notions are already fixed in the language, that is why "it is necessary to distinguish really "fundamental" metaphor which is the condition of creation both of the language and the mythological notions" (Cassirer 1990: 35). This "fundamental" metaphor is formed through the cognitive mechanism of analogy between various natural phenomena which was inherent in the primitive human mind and enabled to express their feelings in mythological and linguistic forms.

E. Cassirer also explains already mentioned principle "a part instead of the whole", the particular case of which, according to E. Cassirer, is the principle of analogy which is fundamental for both linguistic and mythological metaphor, because in the mythological mind "every part not only represents the whole and individual represents species or genus, but they are the same; they are not only their mediated reflections, but they directly absorb the power of the whole, its meaning and reality" (Cassirer 1990: 38), what generates metaphor as the replacement or reversion of generic and subnotions. However, this process took place unconsciously, because of psychical nature of the primitive mind.

The researcher emphasizes the mythogenic potential of the linguistic metaphor since "unnamed things do not exist in the language at all, and if they are named identically, they seem to be identical", that is why "the identity of features fixed in the word" levels other aspects of the notions and causes their disappearing, that is "the language treats identically the contents which seem to be different in respect of direct sensory perception or logical classification, thus each expression intended for one content can be transferred onto another" (Cassirer 1990: 40). Therefore, mythogenic potential of the linguistic metaphor can be realized only in the environment of mythological consciousness, which is sensory and concrete, incapable of abstract thinking.

In general, E. Cassirer's approach to the solution of the problem of the language or myth primacy is not historical, but philosophical and phenomenological, because the researcher formulates this question in the next way: "Is the metaphorical expression of language anchored in mythological state of mind, or, conversely, a state of mind can be formed and developed on the basis of language?" – and he immediately notices that this question is objectless, because "obviously, the question is not about empirical ascertainment of "earlier" or "later", but just about the ideal correlation under which the linguistic form correlates with the mythological one, about how one penetrates into another and determines its content" (Cassirer 1990: 36). Thus, E. Cassirer is positive of that linguistic and mythological forms were created simultaneously and this creation was based on the same principles.

Mythological sources of language were asserted in the works of J. Herder and F. Schelling in due time and that was also noticed by E. Cassirer. In particular, J. Herder considered that "the humans created the language … with the sounds of alive nature which were turned into features comprehended by their powerful mind", because "the sounding of every creature was heard as its name with which the human soul engraved the image of this object connecting the thought about it and its feature". Thus, when "the thought about object was at the crossroads of the agent and its action and the sound had to designate the sounding object" then "the names arose from the verbs, but not the verbs from the names" (Herder 1959: 145-146). As we can see, the philosopher considered hearing to be the most important source of perceptions for the primitive human in the process of comprehending the reality,

however he did not escape the problem of naming of unsounding objects. J. Herder argues that various features of the object (colour, smell, sound etc.) do not exist isolated, bur "pour together" and "the less clear the perceptions are, the more they pour into each other". Arising of the words for expressing of non-hearing perceptions was caused by the fact that "the soul seized with the stream of perceptions felt the necessity to create the word and chasing this feeling, perhaps, found the word prompted by the neighbouring perception" (Herder 1959: 150-152). Obviously, the issue here is the synaesthetic perceptions, that is "the arising of one type of perceptions under the influence of the irritant of another type of analyser" (General psychology 2011: 461).

J. Herder notices that "if all nature makes sounds, it seems to the sensory human that it lives, speaks and acts", that is why "all mythology is contained in the verbs and the names" and "transformation of the verbs into the names" is "the easiest way to the abstraction" (Herder 1959: 147). At the same time the philosopher espouses the hypothesis about the primacy of the poetic language concerning the prosaic one claiming that "the natural language of the creatures imparted with intellect was embodied in the sounds and images of the action of passions and alive creativity! Its vocabulary was the vocabulary of the soul and at the same time the mythology and fairy epopee of the actions and conversations of all the creatures! In other words, it was the poetic fancy filled with passion and interest!" (Herder 1959: 148). Thus, these arguments are based, first of all, on the emotional and sensory component of the poetic language, but do not concern to its metaphoricity. However, this thought does not contradict that the primary metaphor was sensory and directed to express feelings and emotions filling the soul of the primitive human.

In this aspect, it should be mentioned the views of F. Schelling who claims that the human mind is impossible without language, that is why the basis of language could not be laid consciously: "the deeper we penetrate into it, the more clearly we reveal that its deepness surpasses every, even the most conscious work" (Schelling 2013: 47). On F. Schelling's opinion, "language is the tarnished mythology, its abstract and formal differences keep the same things as mythology", because "every name is personification" (Schelling 2013: 48). As to mental or abstract concepts F. Schelling espouses the hypothesis about the sensory concreteness of the primary metaphor.

Nowadays cognitive linguistics operates with the term of cognitive metaphor which is more old-arisen than the linguistic metaphor, because the first one reflects the process of cognition and taking the linguistic forms of the obtained knowledge. Thus, the statement that the primitive mythological thinking was quite metaphorical is true, but this metaphoricity was not linguistic, bus sensory and imagery. That is why here we can find the answer to the question about the primary nature of the myth and the secondary one of the language.

***5. Conclusions.***

To sum up, it should be noticed that the problem of the cognitive nature of primary metaphor is related with the peculiarities of the primitive human mind which is mythological, that is intuitive, sensory and deprived of the abstractions, what determined the mechanism of the primary metaphor creation, which was not linguistic, but sensory and concrete, based on the sensory analogy between the objects and phenomena of extralingual reality and the inner mental states of human. The primitive humans did not separate themselves from nature and operate with the abstract notions, however they were overfull with various feelings requiring some expression, that is why they associated these feelings with the surrounding phenomena, what subserved production of both the mythological images and linguistic forms. Hence intuitive and sensory nature of the primary nature and also the transferring of the inner states onto surroundings.

There were three approaches of studying the metaphoricity as a property of the primitive human mind: 1) the linguistic theory of myth by M. Müller which postulated the primacy of language concerning the myth and forming of the latter through the obliteration of the initial sense of the linguistic metaphors, and also objected the possibility of coexisting of metaphoricity and abstractness of the human mind; 2) the anthropological theory of myth which representatives supposed that, firstly, myth is deeper phenomenon than the simple obliteration of the initial sense of the linguistic metaphors, but it is based on the sensory analogies between the real objects, and, secondly, the loss of ability to operate with the abstract notions and transition to the sensory analogies contradict the theory of evolutional development of the human mind; 3) Neo-Kantian theory which advances arguments for the common sources of myth and language, and their tight interplay during the development of the human cognitive abilities.

The primary metaphor as a cognitive process and its result at the same time is based on the analogue thinking and is a product of the mythological mind. Transformation of the mythological mind started the development of the abstract thinking, and therefore the metaphorization veer. Modern people use the elements of the concrete domain to express the abstract one. The abstract thinking did not take the place of the metaphorical one, they became interdependent and creatively complemented one another, that is both linguistic and cognitive metaphors make it possible to comprehend and express novel conceptions, and the critical abstract thinking assists to escape misunderstanding of metaphor. Perspectives of the further researches are connected with the revealing of the cognitive mechanism of analogy of the primary metaphors in the poetic text.

***References***

Cassirer, E. (1990). Sila Metafory [The Power of Metaphor]. *Teoriya metafory*. obshch. red. N. D. Arutyunovoy, M. A. Zhurinskoy. M. : Progress. 33–43.

Cienki, A. (1998). Metaphoric gestures and some of their relations to verbal metaphoric expressions. *Discourse and Cognition: Bridging the Gap*. ed. Jean-Pierre Konig. Stanford, California: CSLI (Center for the Study of Language and Information). 189–204.

Frazer, J. (1986). *Zolotaya vetv* [The Golden Bough]. M.: Izd-vo politicheskoy literatury. 704.

Freeman, M. (2003). Poetry and the scope of metaphor: Toward a cognitive theory of literature. *Metaphor and Metonymy at the Crossroads: A Cognitive Perspective*. eds A. Barcelona. Berlin; New York: Mouton de Gruyter. 253–281.

Herder, J. G. (1959). Traktat o proiskhozhdenii yazyka [Treatise on the Origin of Language]. *Izbrannye sochineniya*. sost. V. M. Zhirmunskiy. M.–L.: Gosudarstvennoe izdatelstvo khudozhestvennoy literatury. 133–154.

Holyoak, K. J., Stamenkovic, D. (2018). Metaphor Comprehension: A Critical Review of Theories and Evidence. *Psychological Bulletin*. 144. 6. 641–671.

Jung, C. *Ob arkhetipakh kollektivnogo bessoznatelnogo* [Archetypes of the Collective Unconscious]. Retrieved from http://gtmarket.ru/laboratory/basis/4229/4232

Kompa, N. (2017). The Myth of Embodied Metaphor. *Croatian Journal of Philosophy*. 17. 50. 195–210.

Kövecses, Z. (2010). *Metaphor: A Practical Introduction*. 2nd ed. Oxford etc.: Oxford University Press. 396.

Kravtsova, Yu. V. (2011). *Metaforicheskoe modelirovanie mira: poeziya i proza* [Metaphorical modeling of the world: poetry and prose]. K.: Izd-vo NPU im. M. P. Dragomanova. 360.

Kuhn, A. (1859). *Die Herabkunft des Feuers und des Göttertranks* [The descent of the fire and the deity]. Berlin: Ferd. Dümmler's Verlagsbuchhandlung. 285.

Lakoff, G. (1993). The contemporary theory of metaphor. *Metaphor and Thought*. ed. A. Ortony. N. Y. : Cambridge University Press. 202–251.

Lakoff, G., Johnson, M. (1999). *Philosophy in the Flesh: The Embodied Mind and Its Challenge to Western Thought*. N. Y. : Basic Books. 624.

Losev, A. F. (1964). Mifologiya (Mythology). *Filosofskaya entsiklopediya*. M. : Izdatelstvo "Sovetskaya entsiklopediya". 3. 457–466.

Mozheyko, M. A. (2003). Mifologiya (Mythology). *Noveyshiy filosofskiy slovar*. 3-e izd., ispravl. Minsk: Knizhnyy Dom. 634–638. Retrieved from http://www.gumer.info/bogoslov_Buks/Philos/New_Dict/477.php

Müller, M. (1887). *Religiya, kak predmet sravnitelnogo izucheniya* [Introduction to the Science of Religion]. per. A. M. Gilevicha. Kharkov: Tipografiya Adolfa Darre. 138.

Müller, M. (2009). *Lektsii po nauke o yazyke* [Lectures on the Science of Language]. predisl. K. G. Krasukhina. 2-e izd., dop. M. : Knizhnyy dom "LIBROKOM". 314.

Naydysh, V. M. (2010). *Mifologiya: uchebnoe posobie* [Mythology: tutorial]. M. : KNORUS. 432.

Ortega y Gasset, J. (1990). Dve velikie metafory [The Two Great Metaphors]. *Teoriya metafory*. obshch. red. N. D. Arutyunovoy, M. A. Zhurinskoy. M. : Progress. 68–81.

Potebnya A. A. (1989). *Slovo i mif* [Words and Myths]. M. : Izdatelstvo "Pravda". 622.

Rudzka-Ostyn, B. (1995). Metaphor, schema, invariance: The case of verbs of answering. *By Word of Mouth: Metaphor, Metonymy and Linguistic Action in a Cognitive Perspective*. Amsterdam: John Benjamins. 205–243.

Schelling, F. (2013). *Filosofiya mifologii: v 2 t.* [Philosophy of Mythology: in 2 vol.]. SPb. : Izdatelskiy dom Sankt-Peterburgskogo gosudarstvennogo universiteta. 1. Vvedenie v filosofiyu mifologii (Introduction to the Philosophy of Mythology). per. s nem. V. M. Lineykina. khkhiv + 480.

Spencer, H. (1876). *Osnovaniya sotsiologii: v 2 t.* [The Principles of Sociology: in 2 vol.]. SPb. : Izd. I. I. Bilibina. 1. 496.

Timofeev, V. G., Petrov, N. V. (2010). Svoystva mifologicheskogo soznaniya [Properties of mythological conscience]. *Vestnik Chuvashskogo universiteta*. 4. 146–151.

Tsur, R. (1992). *Toward a Theory of Cognitive Poetics*. Amsterdam etc.: Elsevier Science Publ. 580.

Turner, M., Fauconnier, G. (2003). Metaphor, metonymy, and binding. *Metaphor and Metonymy at the Crossroads: A Cognitive Perspective*. ed. A. Barcelona. Berlin; New York: Mouton de Gruyter. 133–148.

Tylor, E. (1989). *Pervobytnaya kultura* [Primitive culture]. M. : Politizdat. 573.

Usener, H. (1896). *Götternamen. Versuch einer Lehre von der religiösen* [Gods name. Attempt of a doctrine of the religious]. Begriffsbildung. Bonn: Verlag von Friedrich Cohen. 391.

Vico, G. (1994). *Osnovanie novoy nauki* [The New Science]. M.–K. : "RELF-book" – "ISA". 656.

Wendorff, F. (1889). *Erklärung aller mythologie aus der annahme der erringung des sprechvermögens (mit vorzüglicher berücksichtigung des griechischen und sanskritischen idioms)* [Explanation of all mythology from the assumption of the power of speech (with exquisite consideration of the Greek and Sanskrit idioms)]. Berlin, Nauck. 199.

Wundt, W. (1914). *Mif i religiya* [Myth and Religion]. SPb. : Izdanie Brokgauz-Yefron. 427.

*Zahalna psykholohiia: Pidruchnyk* [General psychology: Textbook] (2011). eds O. V. Skrypchenko, L. V. Dolynska, Z. V. Ohorodniichuk ta in. K. : Karavela. 464.

**Бібліографічний опис:**

Бородійчук, Н. В. (2018). Когнітивний механізм аналогії та його роль у процесах творення первісної метафори. *Науковий часопис Національного педагогічного університету імені М. П. Драгоманова. Серія 9 Сучасні тенденції розвитку мов*. К. Вип. 17. С. 5–18. DOI: https://doi.org/10.31392/NPU-nc.series9.2018.17.01

***Анотація***

*У статті розглядається когнітивна сутність метафори, яка формувалась у середовищі міфологічної свідомості первісної людини. Зроблено припущення, що такі основні властивості міфологічного мислення, як чуттєва конкретність та нездатність до формування абстрактних понять зумовили і характер первісної метафори, яка утворювалась шляхом когнітивного механізму аналогії між предметами й явищами довкілля та внутрішніми душевними станами людини і була не мовною метафорою, а чуттєво-конкретною. Установлено, що напрям процесу метафоризації у свідомості первісної людини був оберненим до сучасного, адже сучасна людська свідомість*

*використовує більш доступні для сприйняття конкретні поняття для вираження абстрактних понять, а первісна людина, яка уявляла себе частиною природи, розуміла свій внутрішній світ як зовнішній, проектувала внутрішні стани, які нині усвідомлюються як абстрактні, на явища природи, що сприймаються органами чуття. Аргументовано, що формування абстрактно-критичного мислення у людини пов'язане із розвитком когнітивних здібностей людини, що зумовило інший напрям процесу метафоризації, а також перехід від міфологічної свідомості до мовної. Проаналізовано три підходи учених до вирішення питання про взаємозв'язок міфу та мови, для яких вагомим аргументом була метафоричність як мислення, так і мови: 1) лінгвістична теорія міфу М. Мюллера, відповідно до якої втрата усвідомлення первісного значення мовної метафори породила міф; 2) міфологічна теорія, що ґрунтується не на мовній метафорі, а на конкретно-чуттєвій аналогії реальних предметів та відчуттів людини (Е. Тайлор, О. Потебня та ін.); 3) неокантіанська теорія Е. Кассірера, яка постулює паралельний розвиток мови і міфу, що мають спільні витоки. Доведено, що метафоричність притаманна мисленню людини будь-якої епохи, адже мовна метафора утворюється на основі когнітивної, тобто саме остання дозволяє осягнути світ та себе в ньому і виразити набуті знання в мовній формі. При цьому метафоричність та абстрактність мислення є гармонійними процесами, що забезпечують продуктивне пізнання світу людиною та творчу переробку його результатів шляхом фіксації у мовній формі.*

***Ключові слова:*** *первісна метафора, міфологічна свідомість, когнітивний механізм аналогії, мовна метафора, когнітивна метафора.*

**DOI:** https://doi.org/10.31392/NPU-nc.series9.2018.17.02
**UDC:** 811.111+112.2+161.2

**Olesya O. Cherkhava**
Kyiv National Linguistic University, Kyiv, Ukraine

# HYPERCONCEPT CONVERT TO CHRISTIANITY RECONSTRUCTION IN ENGLISH, GERMAN AND UKRAINIAN TEXTS OF RELIGIOUS POPULAR DISCOURSE

**Bibliographic Description:**

Cherkhava, O. V. (2018). Hyperconcept CONVERT TO CHRISTIANITY Reconstruction in English, German and Ukrainian Texts of Religious Popular Discourse. *Scientific Journal of National Pedagogical Dragomanov University. Series 9. Current Trends in Language Development*. K. 17. 19–31. DOI: https://doi.org/10.31392/NPU-nc.series9.2018.17.02

***Abstract***

*The article covered the hyperconcept CONVERT TO CHRISTIANITY reconstruction in English, German, Ukrainian informative and agitational texts of religious popular discourse. This mental construction has been established through the profiling of Biblical quotations transposed in the religious popular discourse texts of informative (identified four types) and agitational character (identified nine types) according to the mechanisms of Biblical knowledge metaphorization. It has been proven that the informative texts sense implicitly stimulates the recipient to have inner mindset about own life (without a mediator). The agitational texts have the same elements and constructions, but are open-ended or have a rhetorical questions stimulating the recipient to contact the religious organization (the mediator).The kernel of this hyperconcept presents the concept RIGHTEOUS LIFE with subordinated concepts FOLLOWING CHRIST, BEING NOT INDIFFERENT, REPENT, PURIFICATION, REQUEST (ASK), STRENGTH FORMING, GRATITUDE (THANK), that form dominant or optional senses in informative and agitational texts of religious popular discourse representing figurative and evaluative hyperconcept zone. In English and German Religious Magazine texts and Religious Calendar Guides the metaphoric concept STRENGTH FORMING dominates, whereas in the Ukrainian variants – the concept REQUEST; in the International Religious Festival Booklet – the concept FOLLOWING CHRIST, in the texts of Religious Synod Meeting Booklet – the concept BEING NOT INDIFFERENT – in English, German and Ukrainian languages. In agitational texts the dominant metaphoric senses are not revealed. Nevertheless, English text environment provides*

*more concise representation of every sense (reflecting author's individuality) or hierarchical fusion of different variant senses, German – determined conception with highly represented author-text-creator, Ukrainian – national symbols priority with mercy, ask or call to unite verbal depiction.*

***Keywords:*** *religious popular discourse, hyperconcept, metaphoric concept, informative text, agitational text.*

***1. Introduction.***

Modern linguistics in its cognitive discursive framework covers a wide array of topics on cognition making available huge amounts of sequences. To implement the following research, on the one hand, the religious-philosophical scientific views were used, on the other hand, the contributions from linguistics, discourse, cognitive and text study are applied (A. Gadomskiy (Gadomskiy 2005), V. Karasik (Karasik 2000), S. Shamarova (Shamarova 2011)**, J. Grimes (Grimes 1994), J.-P. van Noppen (Noppen 1981) et al.). Common questions that arose within such a synergetic scope are circumstances interactions** that generate conceptual senses of religious language and variable religious literature types (sacred and public).

Supplemented by a large body of Biblical quotations, the religious text has been mainly analyzed according to its religious division. Recently, the process of slicing and dicing religious texts attracted the religious popular discourse researchers (hereinafter – RPD (J. Ocheredko et al.).To describe the scope of the following article the optimal religious popular discourse definition as one of the main varieties of institutional discourse type that aims to incline people to faith through popularization of religious belief among social groups and by exerting religious influence not by manipulation but by persuasion with biblical quotations or verse employing adaptation / simplification of religious biblical information and presenting religious faith root (its conceptual senses potentially laid out in the religious language) has been provided. Having a multidimensional knowledge derived from the above-mentioned concepts that compose a cognitive context in RPD texts – the hyperconcept CONVERT TO CHRISTIANITY base (consists of eight metaphoric concepts FOLLOWING CHRIST, BEING NOT INDIFFERENT, REPENT, PURIFICATION, REQUEST (ASK), STRENGTH FORMING, GRATITUDE (THANK)).

***2. Text Taxonomy of Religious Popular Discourse.***

Reconstruction is viewed as a way of representation and interpretation of religious reality through its objectification in the light of the religious popular discourse text that reflects variations of the Christian worldview (pre-Christian stage of hyperconcept forming). Modern texts provide the procedural actualization or implementation of the presupposed concept depending on the goal of Biblical knowledge popularization – “to inform” or “to agitate”.

*Religious informative texts* are represented by four main types: 1) Religious Magazine, 2) Religious Calendar Guides: a) Tear-Off Calendar; b) Andachtsbuch; c) Daily Bible Promises (IPhone Bible Promises For Every Day); d) Daily Planner; e) Devotionals; f) Meditations; 3) International Religious Festival Booklet; 4) Religious Synod Meeting; whereas *religious-agitational* – by nine main types: 1) Prop-Leaf; 2) Prop-Poster; 3) Prop-Brochure; 4) Prop-Booklet / Prop-Pamphlet; 5) Prop-Leaflet / Fold-Out Leaflet; 6) Prop-Flyer; 7) Pocket Calendar ; 8) Outside Prop-Text (billboard / lightbox / banner); 9) Prop-Prayer-Booklet.

In the following texts the main differences of confessions become visible and noticeable, since every Christian approach represents variable acknowledgement of ETERNAL LIFE.

***3. Hyperconcept CONVERT TO CHRISTIANITY Kernel Zone Reconstruction in English, German and Ukrainian Texts of Religious Popular Discourse.***

The hyperconcept CONVERT TO CHRISTIANITY kernel (dominant) represents metaphoric concept RIGHTEOUS LIFE that stands for the symbiosis of the seven above-mentioned variant meanings and reflects the two main oppositional representations of native speakers’ conception: a) act / choice to YOURSELF (good-bad) and b) act / choice to OTHERS (good – bad). The basis of the metaphor RIGHTEOUS LIFE in the texts of RPD

(English, German and Ukrainian languages) is represented by the common conceptual feature "observance of moral rules". Germanic texts are united by the meaning "to have a determined course in life" (to think straight; to live the principles of / to have life and have it to the full / dem Leben Richtung geben), whereas in Ukrainian – "choice / step" (вільний діалог, вгору чи вниз, єдність / співпраця, гідність). Having reflected diachronic sequences among these semantic complexes, the basic metaphoric sense RIGHTEOUS LIFE was established to be hierarchically dominant, despite the fact that every separate text may also include other dominant senses. This metaphoric sense is increasingly reflected in the texts of Religious Magazine. Intertwining of senses BEING NOT INDIFFERENT and RIGHTEOUS LIFE is especially noticeable in texts of Religious Calendar Guides with the performance of the conceptual component "direct / to the right to eternity" stereotyped in English Religious Calendar Guides as positive life thinking, correct actions of people who form personality and culture: *"Trust is having faith in someone or something. It is a positive attitude about life. You are confident that the right thing will happen without trying to control it or make it happen"* (The Virtues Project Educator's Guide: Simple Ways to Create a Culture of Character). Equally dominant the sense FOLLOWING CHRIST in the Religious Calendar Guides is reflected provoking the general idea of pilgrimage: *"Blessed are merciful, for they will obtain / be shown / receive mercy"* (Mt. 5:7); *"I came that they might have life and have it to the full"* (Jn. 10:10). Meanwhile in the International Religious Festival Booklet text the following metaphoric sense becomes optional towards the kernel concept RIGHTEOUS LIFE (because it involves the image of leaders / representatives of the denomination and common for such texts "call to come") and the periphery concept BEING NOT INDIFFERENT to a) voting of religious leaders; b) their interest in influencing certain events in a religious organization, c) joining a religious community, attending their activities, d) caring for each member of the family / self-care.

***4. Evaluative Figurative Zone of the Hyperconcept CONVERT TO CHRISTIANITY in English, German and Ukrainian Informative Texts.***

In religious popular discourse informative texts the dominant and optional sense disclosure inclines the recipient to the personal appeal to Biblical text directs the recipient to the very text of the Bible, for deep reflection, to form his own religious vision. Such narrative-informative presentation of the material provides the tactics: a) EXPLANATION begins with a rhetorical question, followed by a hypothetical assumption of the correct answer: *Why does God not answer all? Perhaps this is because these people have no close relationship with Him*. As we see, the motive of a righteous way of life is presented as "staying in constant contact with God". The retrospective historical and cultural presentation of information aims to stir the reader's wish to follow religious practices: *"How did you prepare to meet the Christmas in antiquity in the Orthodox family? These holidays were waiting all year-long, preparing him diligently* [...]*" ("to adhere to the Christian traditional customs")*; b) INFORMATION is a consistent combination of Biblical citation and a relevant thematic sample of fiction, which can give an interpretation of a Biblical statement, commentary or refinement, or even its definition. Information in introduction, main part and conclusion in every informative text stimulates the motivational part of the reader's thinking about the autobiographical situational models and the belief in converting to the Christian faith; c) RELIGIOUS NOTION PERCEPTION includes special emphatic expression that supplies righteous motives details; d) COMMENTING with remarks of gratitude to a family member or mentor who implicitly contain the motive of being in a relationship with his neighbor as with the Lord. The hyperconcept CONVERT TO CHRISTIANITY is formed on the information placed on the title page, because well-chosen religious slogans, adaptation of Biblical quotation and visualization (establishes diachronic relationships between cognitive

complexes of episodes and headings) correlate with the type of text (the topic covering the headings of the magazine reflects the information on the title page) and the most immediate attention is attracted by the average person – through social practice (popularization) with the product – the text.

Social practice, under which we implement the corresponding text, is the constant coverage of real social and religious (Christian) events or the view of the church (the life of a certain denomination) on the general social problems (actual local event or event of a state scale, sometimes international) – in a special way demonstrates what steps a person must take during his earthly life in order to gain eternal life. For example, English Magazine "Religious Educator" represents the CURVED ROAD depiction in the forest with phrases: *Let us think straight!; Growing Old Graciously: Living the principles of the gospel is the best way to get blessings and thereby to grow old graciously. I think the gospel brings peace of mind.* German texts of "Kirchen Zeitung" and "Stadt Gottes" represent the depiction of Christ as four points of compass with sun shine labeled: *Wie kostbar doch das Leben ist!; Auf ewig! Oder doch nicht?* Ukrainian "Пізнай Правду" text includes opposite directions of human progress (motivational UP) or degradation (demotivational DOWN) with a depiction of LADDER (endless symbol), phrase "Вільні Вибирати" with Biblical quotation: *"Життя і смерть проявив я перед тобою, благословення й прокляття. Вибирай життя".*

Archetype-stereotype sequences chains of all metaphoric concepts in the text of Religious Magazine (one of 13$^{th}$ evaluative figurative periphery sense stratum of the hyperconcept CONVERT TO CHRISTIANITY) demonstrates the rank of sense RIGHTEOUS LIFE, because all metaphoric senses are intertwining with the motive "righteous life on Earth". The semantic shift of verbal meanings of variant names of concepts transfers from religious-biblical to the socially constructed acquainting the real contextual meaning through the scope of event / problems of the country.

In order to get ETERNAL LIFE the text of the Religious Calendar Guides suggests to turn to the context of the Bible every day for self-perfection, self-control, motivation, a clear vision of reality, dialogue with the Lord (in the form of prayer-gratitude). Social practice corresponds the implemented text in the form of a notebook (for a year, month, day), personal counselor for daily note throughout the year to biblical quotations and their explanations, comments, thoughts of their own life, which are the vital stages of the "path to eternal life". Religious Calendar Guides are the most differentiated according to the *social stratification* of people and groups by horizontal stratum on the basis of inequality (it does not concern money or education, but only quality of lifestyle) has the following types: a) Tear-Off Calendar; b) Andachtsbuch; c) Daily Bible Promises (IPhone Bible Promises For Every Day); d) Daily Planner; e) Devotionals; f) Meditations. A special style of daily reading has quickly gained popularity in the field of fiction, such as "365 short stories for the soul" where a righteous life motivators are found (based on moral values without biblical citation).

The hyperconcept CONVERT TO CHRISTIANITY actualizes metaphoric concepts mainly on the title page of the corresponding religious' slogan, adaptation of biblical citation and visualization. The information on the title page implicitly or explicitly emphasizes the daily appeal to God (closed cycle of eternal life) throughout the year.

Evaluative figurative (periphery) part of the semantics "to move forward", which characterizes the nuclear concept RIGHTEOUS LIFE is represented in the English guide as a recipe for God's care: *"belief and trust in and loyalty to God"*. German variant "*Sonne und Schild*" *Evangelische Tageskalender 2017* shows Biblical quotation: *"Ich schenke euch ein neues Herz und lege einen neuen Geist in euch"* (Hes. 36) and the depiction of protected flower that feeds the sun. The most common is this type of text in Ukrainian culture (mainly

among the elderly people) temporally covering all Christian traditions passed from one generation to the next (in the context of each Christian event variant metaphorical meanings are revealed, for example, during the Easter fast) with the emphasis on the differentiation of Catholics, Orthodox and Greek Catholics, for example *"Православному календарі 2014"*. The motto of the right choice of life is stereotyped through a series of episodic reflections, explanations (transformed biblical quotations): *"Людина духовно летить за допомогою двох крил"*, rules (like 10 Ten God's Commandments) *"Золоті правила в житті"* with a title-rhetorical questions *"Що для вас важливо в житті?"*, inductive exclamatory sentence: *"Необхідно вчитися насолоджуватися у суспільстві самого себе!"*, metaphor for affirmative actions *"Життя – це Щастя", Життя Боже "вічне життя" – це перш за все життя разом, життя у співпраці.*

According to information and purpose of the International Religious Festival Booklet text, at the stage of personality forming (youth), it is necessary to join (to go through the journey for purification, repentance, gaining power, etc.) followers / pilgrims from all over the world to meet with the Pope (like the three kings went to the newborn Jesus Christ).The passage of the right path involves uniting with the community, with God and by oneself, which indicates the pronouns in the texts *we / wir / ми* та *our / unser / наш*: *"What brings us together [...] our church connects us globally, regardless our different cultures, languages and customs / Das, was uns zuinnerst verbindet [...] unsere Kirche uns weltumspannend verbindet durch allen Kulturen, Sprachen und Gebr; Our pilgrimage to / Unsere gemeinsame Pilgerfahrt nach"* [WJT 2005: 4]. The social practice that implements the all nations and denominations unify in the near future, an international religious assembly of youth (temporally determined) every three years, provokes the interpretation for a better understanding of the right earth life (the faith that becomes a culture): *"The Youth Festival – faith which becomes culture"*. The concept RIGHTEOUS LIFE in the evaluative figurative stratum of the hyperconcept FOLLOWING CHRIST is actualized in THE BOOKLET OF THE INTERNATIONAL RELIGIOUS FESTIVAL through the idea of PILGRIMAGE. The most striking attraction of attention to the performance of the International Youth Religious Festival is the logo, which in a special way represents the holistic sense of the popularized text, as well as reflects the author's individuality of the creator of the booklet (person or group), his creativity, but does not allow free interpretation due to the universal nature of the religious message. Non-verbal means of the logo are signs of other semiotic systems that do the basic semantic load – draw attention of the addressee, act on it, but need more information for decoding and interpretation.

Another important life step during earth life to get eternal life reflected in the text of Religious Synod Meeting (usually popularized within the framework of any religious action and that is close to propaganda texts) – "not to be indifferent to the life of religious organization". English versions of this text are considered on the example of the "The Orthodox Church in America" booklets with their own emblem, in particular, the heading of 2010: *"Family as Garden"* (By Albert S. Rossi), also official address "The Holy Synod of Bishops" 2016 (the same Church unity), for example, *"Statement of the Holy Synod of the OCA on Sincerely Held Religious Beliefs Regarding Marriage"* (respectful attitude to marriage). German texts of Religious Synod Meeting (2014 and 2017) – "Pfarrgemeinderat": Pfarrgemeinde / Kirchengemeinde (Pastoral Council of Priests / Bishops) – "*Pfarrgemeinderatswahl*". Word play *"Ich bin da.für"* (I am here / I stand for), besides the Biblical context reference *"Я Той, що є"* (Вихід 3:14) is relevant to the lexeme *faith* / *Glaube* / *віра* and performs the idea *"Gott ist jemand, der auf die Menschen zugeht und seine heilvolle Präsenz verspricht"* (the motive "Бог іде до людей, щоб врятувати" is transferred to the mission of religious organisation. Ukrainian variety the following text type often has

the synthesis of concept senses RIGHTEOUS LIFE and FOLLOWING CHRIST. For example, posted on the website of the Greek Catholic Church in 2018 (Рис. 1.), the booklet *"Всеукраїнська Хода на захист прав дітей і сімей"*, produced by All-Ukrainian Council of Churches and Religious Organizations, emphasizes the unity of everyone and the nation: *"Щаслива родина – здорова Україна!" / "Happy family is a healthy Ukraine!"* The implicit meaning of lexeme *Хода* (Khoda) – is a process of "direct movement, development, progress, achievement and dissemination of ideas".

*Рис. 1*

*5. Evaluative Figurative Zone of the Hyperconcept CONVERT TO CHRISTIANITY Reconstruction in English, German and Ukrainian Agitational Texts.*

The texts of agitational character characterizes representation of the mediator in involving people to the Christian faith, since the social practice of their actualization is the rapid redirection of the recipient to a religious / church / confessional organization. These institutes assumes the responsibility to show the meaning of the Bible (this is similar to the quasi-religious texts of fideistic discourse with destructive information calls to manipulate human consciousness, but these types of texts are not considered in the work). Campaigning people in various ways (symbols, words, slogans, monuments, music, biblical facts) to influence the religious consciousness of society; purposeful distribution in the society of certain ideas, values, norms, behavior of a particular denomination.

Religious agitational texts are denoted to 1) spread the religious thoughts with the aim of their penetration to the social consciousness; 2) agitate people with different means (symbols, words, slogans, music, Biblical facts) in order to influence on the religious social group; 3) distribute particular ideas, norms, values of the separate confession in the society.

Insignificant by size the text of a religious character – Prop-Leaf is the performance of mass practical activity of social group (whose interests it expresses) / religious or church organization (certain denominations) whose information often functions as advertising (*Jews behind race mixing – Christian anti-jewish party*; *Religious extremism*; *Sozialismus statt Religion: Die deutsche Sozialdemokratie vor der religiösen Frage*).

The structure of this type of text fungible: the information is usually placed on one sheet with a call / adapted biblical quotation (religious slogan / punchy slogans, slogans, biblical fact, rhetorical question, and pronounced symbolism / figurative / rendering). The modern recipient – the Internet user may show (in a special schematic area of the leaf) a link to the site of organization, the more information about which and the ability to join it, people can find in the Internet space. For example, the English version of the text uses archetype element *way* in the metaphorical concept RIGHTEOUS LIFE *"This is the Way"* imposed on the visualization of the international religious festival – the same figure of Jesus Christ (Merciful Jesus) as the final purpose of the journey, without interrupting the mediator

(visualization of the Pope in the central schematic zone, as if in the middle of Christ, where the heart of Jesus is always depicted as mercy).

Prop-Poster is a work of art and a variety of duplicate graphics with a short text and vivid colors on a large-scale paper; is well perceived at a distance popularizing religious and social values. Social practice of the text creation – is the use of copyright religious art (may impose military events in the country or function as a guard – contain a call-request to bless / protect the nation or the call to action *"Pray for Ukraine"*) in a specially designated place for daily contemplation and reflection (personal and collective – family / collective). The semantic load transmits the peculiarities of filling the schematic zones (possible inscription-appeal) and corresponding to the disclosure of each variant metaphoric concept image considering as "the visual type of information corresponding to the abstract-logical thinking relating to the verbal sphere of the subject (meta-language interpretation)", with the passage of the code from the figurative representation of the meaning to the verbal. As in Prop-leaf the reference to a design company in the form of its name, Internet link or copyright sign (signature or last name), which create advertising for the intermediary, is possible. In English versions, frequent is the image of mercy (*Merciful Jesus*, *Madonna and Child*) in the German-language there is an inscription on the poster in the form of a rhetorical question (*Wer verbindet ein gebrochenes Herz?*), A short answer (Gott) and the corresponding Biblical quote: *"Er heilt die gebrochenen Herzen und verbindet ihre schmerzenden Wunden"* (Psalm 147: 3), in the Ukrainian language – "to heal the wounds of the heart". The corresponding text also has a pronounced mediation – its logo.

Prop-Brochure is a non-periodic or periodic text-book edition with a volume of over 4, but no more than 48 pages, which is used to promote the ideology of a certain denomination. The structure of the text and the use of all means of attracting the attention of the recipient allow popularizing the text quickly. A mediator of Christian faith is a religious organization that distributes a brochure to engage in its online blog (or directly at a meeting). The purpose of popularization is the representation of the book of religious author's reflections: *"Living our beliefs", "Nach unseren Überzeugungen leben", "Великопосні роздуми з Блаженнішим Любомиром Гузаром" ("Смиреномудріє – це жити в правді")*, which is a stereotypical motive of righteousness, and expresses in Ukrainian instances the attitude of vital humility (sometimes oppression) inherent in Ukrainian mentality. Prop-Booklet / Prop-Pamphlet is a highly informative printed matter that is widely used for presenting the activities of a religious organization of a certain denomination, holding its meetings (seminars) and containing contact information for those who wish to join. The booklet (informative texts), similar in structure to the book, primarily attracts attention to the title page, which has the name of the organization (such as the Family Milestones Ministry Booklet) and the stereotyped motive of the Biblical citation *"A common path for church and homes"* with a possible link to the organization site. In the middle of the English booklet, the community ideology is often depicted, which helps families to go through all phases of parenthood (as certain vital right steps of righteousness) with detailed explanations of how to "raise children in the faith". In the German booklet, the use of the motive to "move from place" is popular. *"Was mich bewegt. Ankommen. Bei Gott. Bei mir", "Die bewegende Geschichte einer wahren Liebe"*, which in Ukrainian culture is represented as *"Рух за життя"*.

Similar to the structure on a personal greeting card, the religious Prop-Leaflet / Fold-Out Leaflet is a small sheet with the inscription corresponding to the Biblical fragmentation, due to the main updating of meanings through the use of visual means (images), metaphorical concepts of the hyperconcept CONVERT TO CHRISTIANITY.

The holistic semantic load is represented by a general motive of the texts as the only salvation - the endless eternal life through the Cross *("I am the way, and the light")* or the endless decay (not in the usual way of the *whirlwind* depiction, but as the infinite destruction, metaphorized as *the abyss*. German texts depict *open gates* (the way to the eternal life) and verbalization: *"Wir können wählen Gott und Heiligkeit oder Uns selbst und Mittelmässigkeit"*, Ukrainian – the quotation *"де скарб ваш, там буде й серце ваше"* (Лук. 12:34).

Prop-Leaflet / Fold-Out Leaflet is a small one-or two-sided promotional leaflet, which usually provides information about the day, the time and place of the religious assembly (involves an invitation, free entry to the action, sometimes the price of a religious trip) used as a quick popularization. Representation of a mediator who converts to Christian faith – a religious / church / denominational organization that holds a meeting by the meaning of the Bible and invites to a pilgrimage journey, carrying out recipient's redirection to the proper action. The structure of this type of text is almost the same in all cultures: the first life step to become a Christian is to come to a meeting (a clearly identified place, sometimes – day and hour) and to call others to join it. An example of Biblical citation adaptation is the English version of *"Come & See"* slogan with a multidimensional semantic load, enhanced by specific four steps with their visualization: 1. *The going person* / *Людина, що іде,* and word *"come"* (symbolizes the convert to faith). 2. *Christ* / *Хрест* and word *"see"* (as to perceive Christ). 3. *World* / *Світ* and identification "*go*". 4. *Євангеліє* and word *"tell"* (Christ mission – to prosper Gods Words). German variety of Prop-Flyer – FLYERALARM uses the verbal compressed appeal-slogan-invitation expressed in many languages as the proper biblical quotation: *"I havn't come to CALL the righteous but SINNERS TO REPENTANCE"* (Luke 5:32) / *"Ich bin nicht gekommen, Gerechte zu BERUFEn, sondern SÜNDER ZUR BUSSE"* (Lukas 5:32). Ukrainian texts include the element of vanity reproach *"Так минає людська слава"* (human glory passes) with the depiction of human life stages – from the birth till the death.

Pocket Calendar is the smallest format as postcard (verbalized and visualized) produced as a table (one sheet) or booklet (torn off pocket calendar). Usually the social practice which actualizes text – "filotaimia" or "calendaristika" (pocket calendars). CONVERT TO CHRISTIANITY is held through: 1) individual author vivid presentation; 2) call-to-protect (personality, for example, from illness, in a road, defense of nation in war): *"Ich schätze!"*; 3) sorrow depiction *"Visual Piety"* with words *"Give Hope!"; "Die Hand reichen!"; "Дай надію!"*; 4) a festive event (name-days) – the saint-protector depiction. The text is used for daily contemplation (personal) and deliberation / by daily vital motivation or as self-protection. A mediator is an artist (or designer company) and his picturesque rhetoric with the use of visual images (saints depiction often represents similar to the above-mentioned metaphoric concepts motives). Outside Prop-Text (billboard / lightbox / banner) – these are the most effective texts of quick religious agitation as they are placed on streets and cover a wide audience at the same time (does not need personal going near bringing in of addressee, because inscription attracts attention of a passer-by).

For example, in the English-speaking environment attraction attention to Biblical quotation is identifying the author *"C'mon over and bring the kids" – God* (Рис. 2) at the black board ground. The following example was commented as *"A godsend: Hip ad campaign going on the road nationally. The messages, white letters against a stark black background, all are attributed to the man, simply signed God. But the early authors are Charlie Robb and Andy Smith of the Smith Agency in Fort Lauderdale. A man who requested anonymity walked into their ad agency last June saying he wanted to market God*" (The History of GodSpeaks 1998: 3) In German culture the direct reference to Bible is more

common. English texts are more of personal character, whereas German – collective, demonstrate the government responsibility – *"Betet für alle, die in Regierung und Staat Verantwortung tragen"* (Рис. 3) or respect to the religious organization that establishes billboard (in English and German countries): "*Wie wählen Sie Ihre Verse aus*? *Thematisch sind sie vorgegeben* […] *unsere Vorstandsmitglieder halten Bibelverse fest, die ihnen durch Intuition oder bei der Bibellektüre geschenkt wurden*. *In einer gemeinsamen Lesung werden die einzelnen Verse bewertet. Wir beten darüber, und dann geschieht die definitive Wahl*" (Spektrum 2010: 4–5). In Ukrainian texts of 2018 – the mercy on orange board ground is emphasized *"Божому милосерді до кожного, хто до нього навернувся": "Господь добрий і вибачливий і многомилостивий для всіх, хто кличе до Нього"* (Рис. 4).

*Рис. 2*

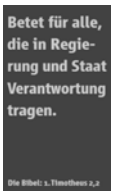


*Рис. 3*

*Рис. 4*

The main lines of semantic load differ in the religious and evaluative mentality of every culture, namely: in English texts, the values often manifest: in English texts the meaning : "proselyte / новонавернений" is reflected (*the convert from a Gentile way of life to Judaism*), *to return to the land of the living, nations turning to God in the future* (Isa 19:22), whereas in German *"Zugang zum Biblischen Wort", "Einzug ins gelobte Land*, in Ukrainian – charity. Prop-Prayer-Booklet – not large-scale, but highly informative printed text, which is widely popular in various social spheres (call for certain life steps with a common and individual prayer for the salvation of the soul). An event in which the following text type is implemented – a critical personal or political (religious) situation in a state that requires urgent actions of nation. Unlike most agitational texts, this type demonstrates concrete immediate steps that must be urgently taken by a person to save him from a difficult situation-degradation, as well as to help avoid anxiety about the censure / bias of his neighbors. In English texts, we find the meaning "search for a way / exit" as *"salvation / sunlight disinfects darkness"* and the critical period of man (country) as *"being in the dark"* with visualized enhancement of *darkness* or a person who inclines his head. In German-language texts, we find the motive of "entering the gate" – *"Geht ein durch enge Pforte": "Ich bin der Weg, die Wahrheit und das Leben; niemand kommt zum Vater als nur durch mich!"* (Johannes 14:6).

Ukrainian Prop-Prayer-Booklet "Борця за гідність". П'ять кроків до здобуття духовної перемоги в Україні" (2013 р.) is an urgent call to unite the citizens in the faith for common prayer in order to save the integrity of the state and the spiritual unity of Ukrainian citizens during the war (confusion), the critical political situation in the state: "*Сильнішою за зброю є повна довіри молитва* […] *ефективнішим, ніж стратегічне планування, є піст і жертва* […] *сильнішою за воєнну силу є смиренна сила народу, який неустанно молиться* […] *Заступництвом Богородиці припинялося насильство і кровопролиття* […] *Його [Ісуса Христа] жертва – це подарунок, який ми можемо або прийняти, або відкинути*".

***6. Conclusions.***

The modern cognitive-comparative-discourse approach to the concepts reconstruction makes it possible to show the mechanisms of key fragments construction (religious-biblical conceptual pictures of the world of English, German and Ukrainian native speakers) formed

by the hyperconcept CONVERT TO CHRISTIANITY. This mental construction has been recognized and generally accepted through the profiling of Biblical quotations transposed in the religious popular discourse texts of informative (identified four types) and agitational character (identified nine types) in a manner corresponding the mechanisms of Biblical knowledge metaphorization. Logically complete the informative texts sense implicitly motivates the recipient to have inner mindset about own life (without a mediator), whereas the agitational texts have the same elements and constructions, but usually have open endings or rhetorical questions stimulating the recipient to contact the religious organization (the mediator). The core of this hyperconcept is presented by the concept RIGHTEOUS LIFE with subordinated concepts FOLLOWING CHRIST, BEING NOT INDIFFERENT, REPENT, PURIFICATION, REQUEST (ASK), STRENGTH FORMING, GRATITUDE (THANK), that shape the configuration of dominant or optional senses in informative and agitational texts of religious popular discourse representing figurative and evaluative hyperconcept zone. In English and German Religious Magazine texts and Religious Calendar Guides the metaphoric concept STRENGTH FORMING is conspicuous, whereas in the Ukrainian variants – the concept REQUEST; in the International Religious Festival Booklet – the concept FOLLOWING CHRIST, in the texts of Religious Synod Meeting Booklet – the concept BEING NOT INDIFFERENT – in English, German and Ukrainian languages. In agitational texts the dominant metaphoric senses are not identified. Nevertheless English text provides brief but comprehensive model of every sense (reflecting author's individuality) or hierarchical fusion of different variant senses, German – determined conception with highly represented author-text-creator, Ukrainian – national symbols priority with mercy, ask or call to unite verbal depiction.

***References***

Alekseyev, M. Ye. (1991). Kategoriya chisla: problemy obshchedagestanskoy rekonstruktsii [Category of number: problems of general Dagestan reconstruction]. *Slavistika. Indoyevropeistika. Nostratika. K 6-letiyu so dnya rozhdeniya V. A. Dybo*. M. : "Nauka". 30–35.

Boeve L. (2003). Linguistica ancilla Theologiae: The Interest of Fundamental Theology in Cognitive Semantics. *The Bible through Metaphor and Translation. A Cognitive Semantic Perspective*. ed. K. Feyaerts. Oxford : Peter Lang. 15–36.

Bohachevska I. V. (2007). *Khrystyyanska naratyvna tradytsiya* [Christian narrative tradition] : avtoref. dis. … dokt. filoc. nauk. K. 22.

Boldyrev, N. N., Alpatov V. V. (2008). *Kognitivno-matrichnyy analiz angliyskikh khristianskikh toponimov // Voprosy kognitivnoy lingvistiki* [Cognitive-matrix analysis of English Christian toponyms]. 4(017). 5–14.

Gadomskiy, A. K. (2005). Teolingvistika: istoriya voprosa [heolinguistics: the history of the issue]. *Uchenyye zapiski Tavricheskogo natsional'nogo universiteta im. V.I. Vernadskogo*. otv. red. N. V. Bagranov. Simferopol: KRP "Izdatelstvo Krymuchpedgiz". 18. 1. 16–26.

Grimes J. (1994). *Problems and Perspectives in Religious Discourse: Advaita Vedānta Implications*. USA : State University of Ney York Press. 213.

Karasik, V. I. (2000). Religioznyy diskurs [Religious discourse]. *Yazykovaya lichnost: institutsionalnyy i personalnyy diskurs*. otv. red. V. I. Karasik, N. A. Krasavskiy. Volgograd: Perbremena. 5–19.

8Krysin, L. P. (1996). Religiozno-propovednicheskiy stil i yego mesto v funktsionalno-stilisticheskoy paradigme sovremennogo russkogo literaturnogo yazyka [Religious-preaching style and its place in the functional-stylistic paradigm of the modern Russian literary language]. *Poetika. Stilistika. Yazyk i kultura: sb. pamyati T. G. Vinokur*. M. : Nauka. 135–138.

Mechkovskaya, H. B. (1998). *Yazyk i religiya: lektsii po filologii i istorii religii* [Language and religion: lectures on philology and history of religion]. M. : Agentstvo "FAIR". 264.

Noppen J.-P. van (1981). Theologie et communication. Le cas de la transcendance divine dans une tentative de vulgarisation theologique [Theology and communication. The case of divine transcendence in an attempt to popularize theology]. *Problemes d'Histoire du Christianisme 10*. eds G. Cambier, Mat-Hasquin. 91–111.

Shamarova, S. I. (2011). O razvitii novogo razdela yazykoznaniya – teolingvistiki [On the development of a new section of linguistics – theolinguistics]. *Teoriya i praktika yazykovoy kommunikatsii*. Ufa: UGATU. 477–480.

Solomonov, M. A. (2011). *Khristianskiy teonim v strukture folklornogo teksta (na materiale prikamskikh dukhovnykh stikhov)* [Christian theonom in the structure of the folklore text (based on the Kama spiritual verses)]: avtoref. dis. ... kand. filol. nauk. Perm. 21.

***Illustrative Material:***

*Агіт-листи / Prop-Leaf / Agit-Blatt:*

*Releaseinternational*. Retrieved from http://www.releaseinternational.org

*Religious and Organizations Leaflets Templates*. Retrieved from http://www.stocklayouts.com/Templates/Leaflet/Religious-Organizations/Template-Design-Library.aspx

*Relihiyna produktsiya* [Religious products]. Retrieved from http://www.blagoslovennya.org.

*Агіт-плакати / Prop-Poster / Agit-Plakat:*

*Relihiyna produktsiya* [Religious products]. Retrieved from http://www.dyvensvit.org.

*Christlische Poster und Plakate Verlag am Birnbach* [Christian posters and posters Verlag am Birnbach]. Retrieved from https://www.verlagambirnbach.de/christliche-Poster/?module=getCategoryContent&row0=product&filter0=Poster

*Etsy*. Retrieved from https://www.etsy.com/listing/245392614/scripture-notepad-christian-stationery

*Агіт-брошури / Prop-Brochure / Agit-Broschüre:*

Broshury sluzhinnya "Khlib nash nasushnyy" [Brochures of service "Our bread is dry"]. *Seriya "Pohlyad vhlyb"*. Retrieved from https://ukrainian-odb.org/ld/

*Bibel und Schriftenmission. Verbreitung der Heiligen Schrift Broschüre* [Bible and scripture mission. Spread the Scripture booklet]. Retrieved from https://www.vdhs.de/index.php?shop.cat.187

*Free In Design brochure templates for Christian church and travel agency*. Retrieved from https://www.pinterest.com/pin/564638872001575845/

*Religious and Organizations Brochure Templates*. Retrieved from http://www.stocklayouts.com/Templates/Brochure/Religious-Organizations/Template-Design-Library.aspx

*Агіт-буклети / Prop-Booklet (Prop-Pamphlet) / Agit-Blättchen:*

*Khristianskiye molodezhnyye buklety* [Christian Youth Booklets]. Retrieved from https://sokrsokr.net/hristianskie-molodezhnyie-bukletyi-2/

*Gospel Tracts and Evangelism Booklets*. Retrieved from https://www.christianbook.com/page/church-supplies/tracts

*Planetshaker*. Retrieved from https://planetshaker.de/christliche-flyer-traktate-und-broschueren-woher-bekomme-ich-gutes-material-zum-weitergeben/

*Агіт-листівки / Prop-Leaflet (Fold-Out Leaflet) / Agit-Flugblatt:*

*Barvy* [Colours]. Retrieved from https://barvu.prom.ua/g223923-listvkivdkritki

*Church leaflet Templates*. Retrieved from http://www.stocklayouts.com/Templates/Leaflet/Religious-Organizations/Church/Template-Design-Library.aspx

*Flugblatt* [Leaflet]. Retrieved from http://www.flugblatt.de

*Агіт-флаєри / Prop-Flyer / Flyeralarm:*

*Druk flayeriv "MAKROS"* [Print flyers "MACROS"]. Retrieved from http://www.macros.com.ua/proof/flyer-961

*Bibel und Schriftenmission. Verbreitung der Heiligen Schrift Flyer* [Bible and scripture mission. Spread of Scripture Flyer]. Retrieved from https://www.vdhs.de/index.php?shop.cat.187

*Religious and Organizations Leaflets Templates*. Retrieved from http://www.stocklayouts.com/Templates/Flyer/Religious-Organizations/Template-Design-Library.aspx

*Кишеньковий календар / Pocket Callendar / der Taschen Kalander:*

*Exodus Christian Web Design & Graphics Studio*. Retrieved from: http://www.exodusdesign.com

*Зовнішні агіт-надписи / Outside Prop-Text / Äußere Inschrift:*

*The History of GodSpeaks*. Retrieved from https://godspeaks.com/about/history-of godspeaks/

*Spektrum*. Retrieved from https://issuu.com/ideaspektrumschweiz/docs/1047_ideaspektrum_epaper

*Агіт-буклети-молитовники / Prop-Prayer-Booklet / Agit-Blättchen-Gebetbuch:*

*Buklety-molytovnyky* [Booklet-prayer books]. Retrieved from http://sober-way-of-life.org.ua

*Molytovnyk bortsya za hidnist. Pyat krokiv do zdobuttya dukhovnoyi peremohy v Ukrayini* [The prayer leader is a dignity fighter. Five Steps To Achieving A Spiritual Victory In Ukraine]. Retrieved from http://blagoslovennya.org.

*CatholiCity*. Retrieved from http://www.catholicity.com/booklets/prayer.html

Geiger A., Güdemann M., Joël M., Freund J., Levy M. A. (1894). *Hanna: Gebet- und Andachtsbuch für israelitische Mädchen und Frauen* [Hanna: Prayer and devotional book for Israelite girls and women]. Wilhelm Jacobsohn u. Comp. 313.

*Reabilitacia*. Retrieved from http://www.reabilitacia.org

*Тексти структурно-клішованих календарних релігійних путівників / Religious Callendar Guides:*
*Відривний релігійний календар / Tear-Off Callendar / der Abreißkalender:*

*Vidryvnyy "Pravoslavnyy kalendar 2014"* [Breaking "Orthodox Calendar 2014"] (2014). Ternopil: TzOV "Vyd-vo "Diana plyus knyhy". 384.

*Vidryvnyy kalendar "Z viroyu v dushi 2014"* [Breaking calendar "With faith in the soul of 2014"] (2013). K. : Vyd-vo "Presa Ukrayiny". 413.

*Sonne und Schild Evangelische Tagesabreißkalender 2017* [Sun and shield. Protestant day tear calender] (2016). Leipzig: Evangelische Verlagsanstalt. 800.

*Книга для духовного читання / Andachtsbuch:*

*Andachtsbuch-2012*. 2012. Retrieved from https://www.booklooker.de/[...].

*Das Buch Der Wahrheit* [The Book of Truth]. Retrieved from http://www.dasbuchderwahrheit.de

*Literatur für ein Leben mit Zukunft! Advent-Verlag Lüneburg! Andachtsbuch 2012* [Literature for a life with a future! Advent-Verlag Lüneburg! Devotional Book 2012]. Retrieved from http://www.advent-verlag.de/cms/cms/upload/[...].

*Біблійні обітниці (щодня або 365) / Daily Bible Promises*
*(та адаптована сучасна версія IPhone Bible Promises For Every Day):*

*Daily Bible Promise*. Retrieved from http://dailybiblepromise.com

*IPhone Bible Promises For Every Day*. Retrieved from http://www.verse-a-day.com/Apps/

*Біблійні задуми (щодня) / Daily Planner:*

*Daily planner*. Retrieved from http://www.Dailyplanner.com

*Короткі біблійні роздуми (щодня) / Devotionals:*

*Jesus Christus*. Retrieved from http://www.christus.de

*Глибокі біблійні роздуми (щодня) / Meditations:*

*Meditations*. Retrieved from http://www.Meditations.com

*Буклети міжнародного релігійного фестивалю / International Religious Festival Booklet / Internationales Religions Fest Broschüre:*

*Weltjugendtag-Internationales Festival* [World Youth Day International Festival]. Retrieved from https://blogitxavier.wordpress.com/tag/weltjugendtag/

*Weltjugendtag* [World Youth Day] (2016). Retrieved from http://www.bistum-muenster.de /index.php?cat_id=13250&myELEMENT=299580

**Бібліографічний опис:**

Черхава, О. О. (2018). Реконструкція гіперконцепту НАВЕРНЕННЯ ДО ХРИСТИЯНСЬКОЇ ВІРИ в англо-, німецько- та україномовних текстах релігійно-популярного дискурсу. *Науковий часопис Національного педагогічного університету імені М. П. Драгоманова. Серія 9 Сучасні тенденції розвитку мов.* К. Вип. 17. С. 19–31. DOI: https://doi.org/10.31392/NPU-nc.series9.2018.17.02

***Анотація***

*У статті здійснено реконструкцію гіперконцепту НАВЕРНЕННЯ ДО ХРИСТИЯНСЬКОЇ ВІРИ в англо-, німецько- й україномовних інформативних та агітаційних текстах релігійно-популярного дискурсу. Установлено, що цей ментальний конструкт профілізується через біблійні цитати, транспоновані в текстах релігійно-інформативного (чотири типи) і релігійно-агітаційного характеру (дев'ять типів) на основі механізмів метафоризації широкоформатного РЕЛІГІЙНО-БІБЛІЙНОГО ЗНАННЯ. Доведено, що смисл інформативних текстів імпліцитно стимулює реципієнта до внутрішніх роздумів над власним життям (без посередництва), тоді як тексти агітаційного характеру містять ті ж елементи та конструкції, але з відкритою кінцівкою або риторичним запитанням, щоб спонукати адресата звернутися до релігійної організації, щоб пізнати Біблію (за посередництва). Виявлено, що ядром гіперконцепту НАВЕРНЕННЯ ДО ХРИСТИЯНСЬКОЇ ВІРИ є метафоричний концепт ПРАВЕДНЕ ЖИТТЯ із підпорядкованими йому концептами НАСЛІДУВАННЯ ВЧЕННЯ ХРИСТА, ФОРМУВАННЯ НЕБАЙДУЖОСТІ, КАЯТТЯ, ОЧИЩЕННЯ, ПРОХАННЯ (ПРО ДОПОМОГУ), ФОРМУВАННЯ СИЛИ, ПОДЯКА, які утворюють домінантні або факультативні смисли інформативних і агітаційних текстів РПД і становлять ціннісно-образну зону гіперконцепту. В англо- та німецькомовних інформативних текстах РЕЛІГІЙНОГО ЧАСОПИСУ та СТРУКТУРНО КЛІШОВАНИХ КАЛЕНДАРНИХ ПУТІВНИКІВ домінує метафоричний концепт ФОРМУВАННЯ СИЛИ, а в україномовних – концепт ПРОХАННЯ; у текстах БУКЛЕТУ МІЖНАРОДНОГО МОЛОДІЖНОГО РЕЛІГІЙНОГО ФЕСТИВАЛЮ – концепт НАСЛІДУВАННЯ ХРИСТА, у текстах БУКЛЕТУ ЗІБРАННЯ РЕЛІГІЙНОГО СИНОДУ – концепт НЕБАЙДУЖІСТЬ – у трьох мовах. У текстах агітаційного характеру не виявлено сталої домінанти метафоричних смислів, проте більш відчутним для англомовного середовища є а) або чітке вираження одного смислу (із індивідуальним авторським відтінком), або б) ієрархічне поєднання різних варіантних смислів, для німецькомовного – цілеспрямована концепція із яскраво вираженою репрезентацією творця-митця тексту, для україномовного – національна символіка, милосердя, прохання про допомогу.*

***Ключові слова:*** *релігійно-популярний дискурс, гіперконцепт, метафоричний концепт, інформативний текст, агітаційний текст.*

**DOI:** https://doi.org/10.31392/NPU-nc.series9.2018.17.03
**UDC:** 81'37

**Oleh V. Demenchuk**
Rivne State University for the Humanities, Rivne, Ukraine

# LEXICAL SEMANTIC MODELLING IN CROSS-LINGUISTIC PERSPECTIVE

**Bibliographic Description:**
Demenchuk, O. V. (2018). Lexical Semantic Modelling in Cross-Linguistic Perspective. *Scientific Journal of National Pedagogical Dragomanov University. Series 9. Current Trends in Language Development*. Kyiv. Vol. 17. p. 32–42. DOI: https://doi.org/10.31392/NPU-nc.series9.2018.17.03

***Abstract***
*The paper focuses on model of situation concept – a representation that is thought to constitute the basis for comparison (tertium comparationis) of lexical semantics in related and non-related languages. The model is considered to represent the content of a lexical item through a sampling of a multidimensional concept. The relevance of the model being a representation of multidimensional semantic space is verified based on the results of the subjective scaling experiment. The concept of situation is considered as a configuration of semantic linguistic dimensions – the characteristics that encode information on how a situation is construed by the semantics of a lexical item. It has been ascertained that the lexical items' semantics of contrasted languages (English, German, Polish, and Ukrainian) encode and distribute information within four semantic linguistic dimensions: representational, sentential, constructional, and epidigmatic. It is posited that the representational semantic dimension encodes information on the gnoseological values of situation participants, the sentential one – on a set and relations of situation participants, the constructional one – on the degree of positional activities or salience of situation participants, the epidigmatic one – on the semantic associations of situation participants. In order to ascertain the content of a situation concept and to establish the ways the information is encoded and distributed in the semantics of lexical items, a directed associative experiment has been used. In reproducing the specificity of the worldview, the expediency of further psycholinguistic research of lexical semantic models is claimed.*
***Keywords:*** *semantic models, semantic dimensions, model of situation, concept of situation, participant, tertium comparationis, method of subjective scaling, directed associative experiment.*

## *1. Introduction.*

Linguistic semantics posited and to some extent still posits the idea of a non-alternative worldview – a generalized one-dimensional construal of the world that does not provide for the inter-complementary and inter-contradictory procedures of its interpretation. Such an approach conformed to the methodology of linguistic theory of meaning, which speaking figuratively became a hostage of a strict disjunction relation, brought to the "either… or…" principle. The information about the world, encoded in the semantics of linguistic items was considered to reflect a discreet interpretation of the reality, basing on the assumption that objects reveal their properties in relation to other objects. However, the situation starts changing, proceeding from

the assumption that the world, surrounding us is not monadic, as it manifests itself in various aspects of human cognition. Such an approach gives evidence of numerous alternatives in the ways the world of discourse (a certain situation or its fragment) is construed in the semantics of linguistic items.

Modern linguistic semantics advocates the priority of a dynamic approach towards the study of linguistic items' semantics (Pustejovsky 1996; Paducheva 2004; Dekker 2012; Iriskhanova 2014; Koptjevskaja-Tamm 2016; Skarabela et al. 2017, etc.). Positing the idea of dynamic conceptualization of the world of discourse, such approaches declare a new conception of semantics modeling, resulting in the elaboration of dynamic semantic models (Lewandowka-Tomaszczyk 1985; Nerlich, Clark 1988; Radden, Kövecses 1999; Traugott, Dasher 2005; Mitchell, Lapata 2010; Millrood 2014; Mukhtarullina et al. 2015; Nisnevich et al. 2015; Eger, Mehler 2016, etc.). In cross-linguistic comparisons, such models are thought to reveal the ways the semantics of linguistic items encode and distribute information on a certain state of affairs in related and non-related languages (Cross-Linguistic Semantics 2008; Narrog 2012; Brychcín, Konopik 2015, etc.).

The topicality of the subject is determined by the general anthropocentric trends of modern linguistic theories, by tendencies to profound studies of the ways the semantics of linguistic items encodes information on how a person comprehends and interprets the reality. The informational approach towards the study of linguistic items' semantics provides for the elaboration of the model of meaning that is supposed to mark the conceptual entity, verbalized in a language sign.

The attempts to make a model that might reveal the connections of conceptual categories with the semantics of linguistic items are inseparable from the search of universal properties of language. The history of linguistics provides for numerous attempts to make an "ideal" language. Formerly, it was considered the "alphabet of human thought" (Leibnitz 1999: 270), or "lingua mentalis" with semantic primes underlying it (Wierzbicka 1980). The elaboration of primes gave rise to new conceptions and approaches that aimed at creating a universal language, among those being: (a) Logic (Philosophic) Language (Martin of Dacia, Siger of Courtrai, Thomas of Erfurt) with modes of being (*modi essendi*), modes of understanding (*modi intelligendi*), and modes of signifying (*modi significandi*) underlying it (Roos 1952; Godfrey 1960; Pinborg 1977); (b) Port-Royal Grammar, positing universal mental structures to underlie the language structures (Arnauld, Lancelot 1966); (c) Natural Grammar, upholding the idea of universal language to be derived from the nature of things (Dalgarno 1661; Wilkins 1668; Elliott 1957).

Of paramount importance at present is the issue of combining methodologically contiguous approaches that deal with semantics modeling within a group of languages or within human language as itself. We admit that semantics modeling acquires significance for cross-linguistic (either contrastive or typological) studies, as it offers methods to decipher the peculiar manners in which the semantics of a linguistic item encodes and distributes information on a certain state of affairs in both related and non-related languages. This may provide for natural and universal notions that are supposed to be found in many (if not in all) languages of the world, irrespective of their genetic and cultural differences (Wierzbicka 1992). Another point, which is crucial for cross-linguistic investigations, is the use of metalanguage as tertium comparationis (*t.c.*). "Metalanguage is to be sufficient to record all features (common and peculiar) of the contrasted systems" (Rahilina 2002: 372).

The purpose of the paper is to characterize the model of situation as basis for comparison of lexical semantics. The purpose is fourfold: to substantiate lexical semantics modeling from a cross-linguistic perspective; to characterize the model of situation as basis for comparison of lexical semantics of related and non-related languages; to elaborate a model of situation; to determine the prospects of semantics modeling. The languages for comparison would be English, German, Polish, and Ukrainian.

***2. Model of Situation as Tertium Comparationis.***

We claim the MODEL OF SITUATION to be the basis for comparison (*t.c.*) of a linguistic items' semantics. As a metalanguage construct, the MODEL OF SITUATION reveals the features of a polycentric model (Taylor 1995: 99) that represents the meaning of a linguistic item as a set of alternative, hierarchically established semantic dimensions. This agrees with the assumptions about the multidimensional nature of cognition modeling (Multidimensional models 1992), as well as with the theoretical premises on how multidimensional situations are modeled (Therriault, Rinck 2007). It is expedient to use this type of model, reasoning from the hypothesis that language semantics reflects the results of situation conceptualization as "conception of something which can be the case in some world" (Dik 1997: 105), cf. one of the Case Grammar slogans: *meanings are relativized to scenes* (Fillmore 1977: 59). From this perspective, the MODEL OF SITUATION is considered as a standard that represents the content of a linguistic item through a sampling of a multidimensional concept that encodes information on how a situation is construed by the semantics of a lexical item. It is worth noting that what is meant here is by no means a real-world situation:

*It is a state of affairs strictly as it is portrayed by the language L and as it is reflected in the possible uses of L. It is a linguistic situation, not a psychologically, logically or pragmatically defined one. It is a complex fact – a set of facts and entities linked by semantic dependency relations into a unified structure that is denoted by the predicate 'L'* (Mel'čuk 2015: 12).

It is posited that a situation is construed based on the conceptualization strategies a designator resorts to in his / her "elaborating" (identifying, estimating, associating, etc.) the situation (the participants and their relations). Each strategy determines the resultant configuration of a situation concept, revealing various aspects (characteristics) of the participants.

A situation concept is configured as a set of *semantic dimensions*, they being the characteristics that encode information on a certain aspect of a situation or its fragment. The semantic dimensions of contrasted linguistic items represent a certain aspect of situation conceptualization by parameters that determine relations and (cognitive or communicative) characteristics of situation participants. Within cross-linguistic comparison, those parameters determine the domains of semantic equivalence of contrasted linguistic items. The parameters establish similarities and differences in the role, communicative (pragmatic), ontological (categorical), referential or deictic (positional) characteristics of participants. The indicated parameters determine not only the semantic extents of linguistic items, but also the semantic correspondences of these items in the contrasted languages. In this regard, the model of situation represents the content of a linguistic unit in the perspective of characteristics and relations the participants reveal within a certain situation.

***3. Types of Semantic Dimensions.***

We posit that the contrasted linguistic items' semantics encode and distribute information on the dynamics of situation conceptualization within four alternative, hierarchically established semantic dimensions: representative (encoding information on the gnoseological values of situation participants), sentential (encoding information on the relationships of situation participants), constructional (encoding information on the positional activities of situation participants) and epidigmatic (encoding information on the semantic associations established between the situation participants).

***3.1. Subjective Scaling Experiment.***

In order to establish the relevance of the model of situation as basis for comparison of lexical semantics and the ways the information is encoded and distributed in the semantics of lexical items we will apply to the method of subjective scaling. The experiment provided for the evaluation of stimuli (lexical items that designate the concept of situation "state of cold") within a five-grade scale. The scope of the concept of situation "state of cold" is as wide as possible and includes such semantic zones: (a) potential physiological state (*It is cold*); (b) general

physiological state (*I have a feeling of cold*); (c) actual physiological state (*I am shivering with cold*); (d) emotional state (*I am living a sad and cold life*). Based on the obtained results, a primary group matrix table was made (see Table 1). The matrix shows the priorities of the respondents (25 students-philologists) in selecting lexical items that correlate with a certain semantic dimension.

***Table 1***

***Primary group matrix of subjective scaling results (linguistic units that designate the concept of situation "state of cold")***

| Stimulus \ Value | 1 | 2 | 3 | 4 | 5 |
|---|---|---|---|---|---|
| *It is cold* | *1* | *3* | *4* | *5* | *12* |
| *I have a feeling of cold* | *2* | *6* | *9* | *7* | *1* |
| *I am shivering with cold* | *3* | *2* | *2* | *10* | *8* |
| *I am living a sad and cold life* | *12* | *3* | *5* | *3* | *2* |

The experiment demonstrated the relevance of modeling a concept of situation through a sampling of a multidimensional concept, as the students responded to all stimuli. The evaluation of stimuli responses reveals equal distributions of the semantic strategies with a tendency towards the representative and relational dimensions. The average group grade for the stimulus "It is cold" amounts to 3,96, for the stimulus "I have a feeling of cold" – 2,96, for the stimulus "I am shivering with cold" – 3,72, for the stimulus "I am living a sad and cold life" – 2,2.

Further, we will characterize the model of situation concept within the semantic dimensions of lexical items in related and non-related languages.

***3.2. Representative Semantic Dimension.***

The **representative** semantic dimension encodes information on the gnoseological values of situation participants. Having the status of incorporated actants (cf. *implicit arguments* in (Jackendoff 1992: 45) or *shadow arguments* in (Pustejovsky 1998: 68)), such participants reveal their values in the semantics of words, lexical word-combinations and phraseological units. Such an approach provides for an "actant-based" orientation of the representative semantic dimension what conforms to the principle of medieval logicians: *objectum specificat actum* (Arutjunova 1976: 125). The gnoseological values of participants are determined by their relation to a certain conceptual domain: perceptual, evaluative, taxonomic, etc. Any of these domains determines the way a participant – either a subject-actant or an object-actant – is interpreted (conceptualized). It determines the cognitive (either perceptual or axiological) perspective of a participant, identifying it within a set of elementary thematic relations (elementary semantic roles). Such an approach conforms to one of the Lexical-Functional Grammar assertions: thematic relations are "descriptions of certain aspects of cognitive conceptualization" (Falk 2001: 99). In this regard, elementary semantic roles are assigned to participants not due to the actantial positions they take in the predicate structure, but relative to a conceptual domain. Cf.: "A semantic role characterizes a participant from the viewpoint of its place in a cognitive structure" (Paducheva 2004: 93).

For instance, the contrasted languages reveal coincidence (similarities) in conceptualizing the ethical evaluative characteristics of participants, encoded in the semantics of the adjective *black* and its cross-linguistic equivalents, cf.: Eng. *black* "evil; wicked": *black-hearted*; Ger. *schwarz* "böse, niederträchtig": *eine schwarze Seele haben*; Pol. *czarny* "zły, niegodziwy, nieżyczliwy": *czarna dusza*; Ukr. *чорний* "властивий злісній, низькій, підступній людині": *чорна душа*. To represent the ethical evaluative characteristics of participants, the contrasted languages may apply to the designations of different modi of perception, cf.: Eng. (a) *blue* "characterized by indecency or obscenity": *a blue language*; (b) *dirty* "morally unclean or

impure; 'smutty'": *a dirty joke*; Ger. *gesalzen* "grob, derb": *ein gesalzener Witz*; Pol. (a) *ostry* "uszczypliwy, złośliwy": *ostry dowcip*; (b) *słony* "nieprzyzwoity, ordynarny, prostacki": *słony żart*; (c) *tłusty* "nieprzyzwoity": *tłusty kawał*; Ukr. (a) *масний* "непристойний, цинічний": *масні анекдоти*; (b) *сальний* "непристойний, грубо-цинічний; соромітний": *сальний анекдот*; (c) *солоний* "дотепний, але грубий; непристойний": *солоні дотепи*.

***3.3. Constructional Semantic Dimension.***

The **constructional** semantic dimension encodes information on the positional activities of participants. The function of the constructional semantic dimension is reduced to the identification of participants' syntactical relations within an *argument structure construction* (Goldberg 1995: 3). The syntactical relations are defined as a medium that relates nominal arguments of the predicate to various syntactical positions, hierarchically arranged according to a degree of their syntactical activity or significance (Kibrik 2005: 134). Argument structure constructions set (specify) the semantic pattern of a situation (e.g. "someone causing something to move", "someone experiencing something", "something moving", etc.) and the way this pattern correlates with the arrangement of syntactical elements in a sentence. The semantic patterns are considered as arguments patterns, which functionally are oriented more on certain types of predicates, rather than on the description of a specific head verb. Cf.: "Constructions – form-meaning correspondences that exist independently of particular verbs" (Goldberg 1995: 1).

The explanatory effect of the constructional semantic dimension is reduced to the establishment of positional (morphological and/or syntactical) characteristics of participants. For example, a logical calculus of the semantic roles of Experiencer and Stimulus encoding positions in underlying diatheses of the contrasted languages looks that way (notation of positions: A – canonical encoding by Agent; P – canonical encoding by Patient; PH – peripheral encoding; EXP – the living entity that experiences the action or event denoted by the predicate; ST – entity that prompts sensory or emotional feeling – not deliberately): A (EXP) / P (ST), cf.: *Ja słyszę głosy*; A (EXP) / PH (ST), cf.: *Er zittert vor Kälte*; P (ST) / PH (EXP), cf.: *З вікна мені видно гору*; A (ST) / PH (EXP), cf.: *Увесь час їй ввижалися дракони*; PH (EXP / ST), cf.: *Мені жарко від спекотного сонця*; A (ST) / P (EXP), пор.: *The sun warms me*; P (EXP) / PH (ST), cf.: *Ona posiniała ze złości*.

***3.4. Sentential Semantic Dimension.***

The **sentential** semantic dimension encodes information on the relations of participants within the predicate-actantial structure of a head verb that belongs to a certain thematic class – a group of words with a common semantic component (Paducheva 2004: 42). The dimension determines relational characteristics of participants within a set of basic semantic roles. The roles perform the functions of tokens of those participants, which one may conventionally correlate with the notions of "subject" and "object" correspondingly. From this perspective, the sentential semantic dimension characterizes participants as "non-specific" actants, whose semantic roles are set not by the definition itself, but by the predicate, that "imposes" such roles on them. Thus, we may posit the correlation of the sentential and constructional semantic dimensions that provide for two different facets of a situation representation. Such a correlation is considered in terms of the right and left parts of a definition: a definition "inlet" and definition itself, e.g.: *X shows Y to Z* (definition 'inlet') ≈ 'X causes Y to be seen by Z' (definition itself) (Boguslavskij 1985: 118). The pattern requires that all elements of the situation should be identical. The condition of the definition correctness consists in the identical set of variables of the right and left parts: all variables necessary for the semantic description which are used in the right part should also be in the "inlet" definition (Plungjan, Rahilina 1998: 109).

In the perspective of cross-linguistic analysis, the sentential semantic dimension is considered to establish the equivalence of lexical items in the aspect of diathetic alternations, resulting in a taxonomic category or taxonomic class change. For example, the English *sound*-thematic intransitive verb *resound* may realize two sentential configurations: Agent-Subject Form, cf.: *Music resounded in the hall*, and Location-Subject Form, cf.: *The hall resounded with*

*music* (Dowty 2001: 171). The same situation is observed in German and Polish, cf.: Ger. **Das** *Gelächter* **tönte durch den Saal *(agent) vs.* Der Saal tönte** *vom Gelächter* (location); Pol. *Śmiech rozbrzmiewał w sali* ***(agent)*** vs. *Sala rozbrzmiała śmiechem* ***(location)***. The observed diathetic shift is the case of the dynamic texture hypothesis realization: L-Subject sentences describe a situation where a kind of event is occurring simultaneously and repetitively throughout all parts of a place or space. Distributed throughout all subregions (surface or space) within a "texture of movement" pattern, the event acquires the features of a dominant phenomenon and, as the result, becomes more salient (Dowty 2001: 176). Cf.: "If, as a result of bringing something into contact with something else, that something else is affected in some complete way that new status of the goal entity is sufficient for its inclusion in the clause's perspective" (Fillmore 1977: 79).

The diathetic shift described above leads to a change of the role structure configuration. In the aspect of participant's communicative ranking, it provides for placing the participant *hall* (the semantic role of Place) in the subject position and the participant *sound* (the semantic role of Theme) in the object position. The ranking shift is determined by changes of the source semantic roles: Place → Patient; Theme → Content. In particular, the participant with the semantic role of Place acquires that one of Patient, indicating the change of the hall state (the hall became filled with some sound). From this viewpoint, the closest equivalent of locatives Eng. *resound*, Ger. **tönen,** Pol. *rozbrzmiewać* ***in the Ukrainian language will be the verb*** *наповнюватися* "ставати заповненим чим-небудь", cf.: *Зала наповнилася музикою*. It is worth noting that the Ukrainian verb *лунати*, equivalent to those of the Agent-Subject Form construction (cf.: *Музика лунала у залі*), cannot be the case of the Location-Subject Form construction in the meaning "to fill (to cover) space with some sound". The matter is that it describes the situation of acoustic perception not as a dynamic, but as a static phenomenon, cf.: *Лунає співом ліс* ≈ 'Ліс є сповнений співом'.

***3.5. Epidigmatic Semantic Dimension.***

The **epidigmatic** semantic dimension encodes information on the semantic associations of situation participants (a case of semantic derivation). We claim that participants' semantic associations are realized within four types of semantic derivation: converse, actantial, implicative and categorical.

A *converse* type of derivation makes use of a "shift in focusing" strategy – displacement of focus of attention from one participant onto another in the way of a diathetic shift that promotes one participant in ranking and demotes the other (Paducheva 2004: 158). Confer the way the situation of "identification vs. manifestation of perceptual quality" is represented (colexified in terms of (François 2008: 168)) in English and German: Eng. *I smell the flowers* vs. *The flowers smell good*; Ger. *Ich rieche die Blumen* vs. *Die Blumen riechen gut*. The utterances demonstrate the redistribution of focus of attention on the situation participants in the way of promoting one and demoting the other. In Polish and Ukrainian, the situation conceptualization applies to different lexicalizations (designations), cf.: Ukr. *Нюхаю квіти* vs. *Квіти гарно пахнуть*; Pol. *Wącham kwiaty* vs. *Kwiaty pięknie pachną*.

An *actantial* type of derivation is reduced to transformations in structure, type or reference of situation participants. Such transformations may provide for: (a) increase or decrease in number of obligatory participants of the source situation. Cf. the case of "external cause participant" omission: Eng. *The thunder frightened me* vs. *I got frightened*; Ger. *Der Donner erschreckte mich* vs. *Ich habe mich erschrocken*; Pol. *Grzmot przestraszył mnie* vs. *Ja się przestraszyłem*; Ukr. *Грім перелякав мене* vs. *Я перелякався*; (b) change of participant's type. Cf. the case of "imaginary perception" situation, developing derivation, based on the transformation Percept → Imaginary Percept: Ukr. *Я почув скрипіння підлоги* vs. *Мені почулося скрипіння підлоги*. As we see, in Ukrainian the situation of "an imaginary perception" is realized by means of case relations, namely by the dative form *мені почулося*, whereas in English, German and Polish the situation is represented by means of the modal predicate

construction with a propositional actant, cf.: Eng. *It seems that I heard the floor creaking*; Ger. *Es scheint, daß ich* **hörte** *den* **Boden knarren;** Pol. *Wydaje mi się, że słyszałem skrzypienie podłogi*. Besides, in English the situation may be represented by a perception verb, used in the form of the Present Continuous Tense, cf.: *I am hearing his voice in my head*; (c) change of participant's referential characteristics. Cf. the cases of reflexive and reciprocal co-references in the contrasted languages. For example, the German reflexive verb *sich sehen* and the Polish one *widzieć się* admit both reflexive and reciprocal co-references, cf.: Ger. (1) *Ich habe mich im Spiegel gesehen* (reflexive co-reference); (2) **Wir sehen uns** *bald* (reciprocal co-reference); Pol. (1) *Widzieć się w lustrze, szybie, wodzie* (reflexive co-reference); (2) *Nie widzieli się w ciemnościach* (reciprocal co-reference). In English and Ukrainian, the co-references apply to different language forms (dimensions), cf.: Eng. (1) *I saw myself reflected in a mirror*; (2) *We have not seen each other for ages*; (3) *When shall we see again?* (*see* "to meet one another"); Ukr. (1) *Бачимося з ним щодня* (*бачитися* "зустрічатися, бувати разом де-небудь"); (2) *Я бачив себе в дзеркалі*.

An *implicative* type of derivation applies to a prototypical situation that serves as a source (supplier) of material for the derived meanings. The derivation provides for the extension based on implications – additional information about the effects of the world changing (Kustova 2004: 39). For instance, the derivational relation in the Ukrainian idiom *світу божого не видно* "1. Зовсім нічого не можна побачити, розрізнити зором; стає або стало темно від сильної зливи, хуртовини, туману, пилу і т. ін." → "2. Когось чи чогось дуже багато" exploits a scenario of "partially confined perception", grounding in the implication "high density – large quantity" (concentration of homogeneous objects is conceptualized as an accumulation of these objects in a considerable quantity). The English equivalent *to be snowed under (with smth.)* "to have so much work that you have problems dealing with it all; to be overwhelmed, esp. with paperwork", represents a case of reversible conceptualization as compared to the Ukrainian one. The derivational relation grounds in the implication "large quantity – high density" (accumulation of objects in a considerable quantity is conceptualized as a concentration of the objects). Foregrounding the idea of an impenetrable obstacle, the idiom gives rise to the situation of "totally confined perception", cf.: *I am absolutely snowed under with work now*. The Polish equivalent *świata bożego nie widzieć* "robiąc coś, koncentrować się tylko na tym, angażować się w to całkowicie, nie zwracając uwagi na to, co dzieje się dookoła" reveals another strategy of conceptualization, representing a case of the so-called "detached perception". It characterizes situation as a condition of mental separation from the world, similar to that one which is associated with a state of detachment from one's surroundings, cf.: *Zaczytał się tak, że o bożym świecie zapomniał*. The derivational relation grounds in the implication "deeper absorbedness – larger detachment" (the more a person gets absorbed into something, the more detached (s)he becomes from something else). The German equivalent *nicht mehr aus den Augen sehen können* "sehr müde, erschöpft, mitgenommen sein" is likely to exploit a scenario of pseudo-, or imaginary perception, grounding in the implication "state of a person – manifestations or symptoms of the state". If a person is very tired, (s)he might suffer from some perceptual disorders that might cause some vision problems (a case of proprioceptive reaction), e.g. making a person see imaginary colours, cf.: Pol. *Komuś pociemniało w oczach* "ktoś ma zaburzenia wzroku spowodowane zmęczeniem"; Ukr. *В очах потемніло у кого* "комусь стає погано, млосно від втоми".

A *categorical* type of derivation is reduced to the extension of a situation concept in the way of specification of the participant's taxonomic class (vide supra). It, in its turn, may stipulate changes in either the taxonomic category or thematic class of the verb, cf.: (a) *Snow covered the fields* (event or happening) vs. *Farmers covered potatoes* (action); (b) *Didn't you hear the doorbell?* (perception) vs. *I heard the news on the radio* (information). In cross-linguistic perspective, the categorical shift reveals similarities and differences in the extension of a situation concept in the way of projection mapping from one conceptual domain onto another

(Lakoff, Johnson 1980). One of the cases is the word *soft* that reveals the extension of a concept of tactile situation towards the situation of visual perception. In English, Polish and German, the semantic derivation applies to the evaluative strategy, based on the conceptualization of some gradual attribute of a perceptual object, cf.: Eng. *soft* "gentle, gradual": *a soft slope, ascent, etc*; Pol. *miękki* "o kształtach: łagodnie zaokrąglony": *miękkie fałdy*. The German equivalent *weich* "durch das Fehlen von scharfen Konturen, Kontrasten, von Spitzen, Ecken, Kanten gekennzeichnet" exploits perceptual strategies of conceptualization, reducing it to the situation of "contrast perception", cf.: (a) *Weiche Linien*; (b) *Weiche Körperformen*. The extension of the Ukrainian equivalent *м'який* "який має невиразні, розпливчасті риси, межі чогось" also applies to perceptual strategies, however reduces them to the situation of "vague perception". The "softness" is conceptualized in the aspect of indistinctly seen or perceived outlines of an object, cf.: *М'які обриси зелених гаїв*.

***3.6. Directed Associative Experiment.***

In order to reveal the characteristics of the participants and their relations within a situation concept, we will apply to a directed associative experiment. The experiment provided for the evaluation of reactions on the word-stimulus *cold* that encodes information on one of the cardinal participants of the situation. The respondents' reactions were paradigmatic and syntagmatic associations that characterize the participant *cold*: (a) by a certain semantic feature (paradigmatic associations); (b) by an actantial position of the predicate (syntagmatic associations). The paradigmatic associations are intended to reveal the characteristics of encoded and distributed information within the representative and epidigmatic dimensions, whilst the syntagmatic ones – within the sentential and constructional dimensions.

The experiment revealed an irregular distribution and encoding of information on the situation of "cold" in the semantic dimensions. With the representative dimension, the information is distributed within such semantic zones: (a) a low temperature of physical environment (*frost* – 19 respondents); (b) time or season characterized by a low temperature (*autumn*, *winter*, *night*, etc. – 19); (c) the physical sensation of cold (*sensation of cold*, *stiffness*, *hypothermia*, etc. – 11); (d) a place with a low temperature (*dormitory, room, street, basement*, etc. – 8). The sentential dimension encodes information on the semantic roles of the participant *cold*: (a) Cause (*shiver*, *tremble*, *feel cold*, *turn blue*, etc. – 18); (b) Stimulus (*feel*, *endure* – 12); (c) Causer (*pierce*, *irritate*, *pinch*, etc. – 11); (d) Theme (*blow*, *approach*, *spread*, etc. – 10); (e) Counteragent (*warm oneself*, *dress oneself*, *fight*, *win*, etc. – 5); (f) Place (*walk*, *fish*, *hunt* – 2); (g) Content (*forecast*, *understand* – 2). The constructional dimension characterizes a positional activity of the participant *cold* (vide supra): (a) A-coding (*pierce*, *kill*, *seize*, etc. – 12); (b) P-coding (*feel*, *endure*, *manifest*, etc. – 16); (c) PH-coding (*shiver*, *feel cold*, *redden*, etc. – 19). The epidigmatic dimension reveals the semantic shifts of the participant *cold*. The concept of the situation extends to the boundaries of: (a) emotions (*sadness*, *anger*, *fear*, etc. – 8); (b) identifications (*icicle*, *snow*, *snowflake*, *wind*, *rain*, *ice*, etc. – 15); (c) evaluations (*discomfort*, *indifference*, *dislike*, etc. – 7); (d) associations (*death*, *purity*, *lack of money*, *spirits*, *family*, *heart*, *smile*, *thought*, *end*, *blade*, *desert island*, *dream*, *without paternal heartiness*, *war*, *weapon*, *knitted socks*, *hollowness*, *disease*, *tiredness*, *tartan*, etc. – 15).

***4. Conclusions.***

The paper claims the model of situation to be the basis for comparison of lexical semantics. The model of situation concept is thought to represent the content of a lexical item as the realization of relations between the basic participants of a given situation. The models represent the semantics of a lexical item through a sampling of alternative, hierarchically arranged semantic dimensions that encode information on the gnoseological values of situation participants (actants), nature of their relationships, degree of their positional activities, and their semantic associations. The information is encoded and distributed within four semantic dimensions: representative, constructional, sentential and epidigmatic. The representative semantic dimension reveals the characteristics of participants by their relating to a certain

conceptual (perceptual, evaluative, taxonomic, etc.) domain. The constructional semantic dimension identifies participants within the scope of an argument structure construction. The sentential semantic dimension determines a relational (realized within a predicate-actantial structure) range of participants. The epidigmatic semantic dimension reveals derivational (based on the extension of a linguistic item semantic paradigm) strategies of participants.

The scope of information, encoded by the contrasted (English, German, Polish and Ukrainian) lexical items in relation to the dimensions is not the same, as it depends on a designator's strategies that determine the priority of a certain mode of encoding. It has been established that languages with a minimized nomenclature of case relations (English, and partly German) typologically tend towards the representative and epidigmatic dimensions. Such dimensions provide for the priority of cognitive (perceptual or axiological) and derivational strategies of a designator, oriented on gnoseological values and regular semantic associations of participants. The languages with a developed system of case relations (such as Polish and Ukrainian) are typologically oriented on the sentential and constructional dimensions. Revealing the priorities of situational and communicative strategies of a designator, such languages focus on the nature of relationships and positional activities of participants.

To ascertain an overall view of the dynamics of lexical items and to establish the way these items distribute information on various types of situations in the semantic spaces of related and non-related languages makes it expedient to carry out further psycholinguistic research into modelling the lexical semantics.

***References***

Arnauld, A., Lancelot, C. (1966). *Grammaire générale et raisonnée, ou La Grammaire de Port-Royal* [Grammar General and reasoned, or The Grammar of Port-Royal]. Stuttgart & Bad Cannstatt: Friedrich Frommann Verlag. 161.

Arutjunova, N. D. (1976). *Predlozhenie i ego smysl. Logiko-semanticheskie problemy* [The sentence and its meaning. Logic-semantic problems]. M.: Nauka. 384.

Boguslavskij, I. M. (1985). *Issledovanija po sintaksicheskoj semantike: sfery dejstvija logicheskih slov* [Studies on syntactic semantics: the scope of logical words]. M.: Nauka. 173.

Brychcín, T., Konopik, M. (2015). Latent semantics in language models. *Computer speech and langua*ge. 33. 1. 88–108.

*Cross-linguistic semantics: Explications, metalanguage, grammar* (2008). ed. C. Goddard. Amsterdam; Philadelphia: John Benjamins Publ. 356.

Dalgarno, G. (1661). *Ars signorum, vulgo character universalis et lingua philosophica* [Art standards, generally the character of a universal language guidebook]. Londoni: Excudebat J. Hayes. 127.

Dekker, P. (2012). *Dynamic semantics*. Dordrecht: Springer. 127.

Dik, S. (1997). *The theory of functional grammar. The structure of the clause*. ed. K. Hengeveld. 2nd ed. Berlin: Mouton de Gruyter. 1. 509.

Dowty, D. (2001). The semantic asymmetry of 'argument alternation' (and why it matters). *Making sense: From lexeme to discourse, in honor of Werner Abraham at the occasion of his retirement*. eds Geart van der Meer and G. B. Alice. Groningen: Center for Language and Cognition. 171–186.

Eger, S., Mehler, A. (2016). On the linearity of semantic change: Investigating meaning variation via dynamic graph models. *Proceedings of the 54th Annual Meeting of the Association for Computational Linguistics*. eds K. Erk, N. A. Smith. Berlin: Association for Computational Linguistics. 52–58.

Elliott, R. (1957). Isaac Newton's 'Of an universall language'. *Modern Language Review*. 52(1). 1–18.

Falk, Y. (2001). *Lexical-functional grammar: An introduction to parallel constraint-based syntax*. Stanford: Center for the Study of Language and Information. 253.

Fillmore, Ch. (1977). The case for case reopened. *Syntax and Semantics*. eds P. Cole, J. M. Sadock. New York; San Francisco; London: Academic Press. 59–81.

François, A. (2008). Semantic maps and the typology of colexification. Intertwining polysemous networks across languages. *From polysemy to semantic change. Towards a typology of lexical semantic association*. ed. M. Vanhove. Amsterdam; Philadelphia: John Benjamins Publ. 163–215.

Godfrey, R. (1960). The language theory of Thomas of Erfurt. *Studies in Philology*. 57(1). 22–29.

Goldberg, A. (1995). *Constructions: A construction grammar approach to argument structure*. Chicago: University of Chicago Press. 271.

Iriskhanova, O. K. (2014). *Igry fokusa v iazyke. Semantika, sintaksis i pragmatika defokusirovaniia* [Games of focus in the language. Semantics, syntax and pragmatics of defocusing]. M.: Yazyki slavianskoi kultury. 320.

Jackendoff, R. (1992). *Semantic structures*. Cambridge, MA: The MIT Press. 336.

Kibrik, A. E. (2005). *Konstanty i peremennye jazyka* [Constants and language variables]. SPb.: Aletejja. 720.

Kobozeva, I. M. (2004). *Lingvisticheskaja semantika* [Linguistic semantics]. 2-e izd. M. : Editorial URSS. 352.

Koptjevskaja-Tamm, M. (2016). The lexical typology of semantic shifts: An introduction. *The lexical typology of semantic shifts*. eds P. Juvonen, M. Koptjevskaja-Tamm. Berlin; Boston: Walter de Gruyter. 1–20.

Kustova, G. I. (2004). *Tipy proizvodnyh znachenij i mehanizmy jazykovogo rasshirenija*. M. : Jazyki slavjanskoj kultury. 472.

Lakoff, G., Johnson, M. (1980). *Metaphors we live by*. Chicago: The University of Chicago Press. 242.

Leibniz, G. (1999). *Philosophische Schriften* [Philosophical writings]. Berlin: Akademie Verlag. 4. 3449.

Lewandowka-Tomaszczyk, B. (1985). On semantic change in a dynamic model of language. *Historical Semantics: Historical Word-Formation*. ed. J. Fisiak. Berlin: Mouton de Gruyter. 297–323.

Melčuk, I. (2015). *Semantics. From meaning to text: in 3 vol*. Amsterdam; Philadelphia: John Benjamins Publ. 3. 566.

Millrood, R. (2014). Cognitive models of grammatical competence of students. *Procedia – Social and Behavioral Sciences*. 154. 259–262.

Mitchell, J., Lapata, M. (2010). Composition in distributional models of semantics. *Cognitive Science*. 34. 8. 1388–1429.

Mukhtarullina, A., Issakova, S., Kuzdibaeva, A., Esenova, K. (2015). The cognitive modelling of textual modality. *Procedia – Social and Behavioral Sciences*. 214. 970–976.

*Multidimensional models of perception and cognition* (1992). New York & London: Taylor & Frencis Group & Psychology Press. 544.

Narrog, H. (2012). *Modality, subjectivity, and semantic change. A cross-linguistic perspective*. Oxford: Oxford University Press. 333.

Nerlich, B., Clark, D. D. (1988). A dynamic model of semantic change. *Journal of Literary Semantics*. 17. 2. 73–90.

Nisnevich, A., Hall, D., Klein, D. (2015). *Probabilistically modeling semantic change. Technical Report No. UCB/EECS-2015-36*. Berkley, CA: Electrical Engineering and Computer Sciences University of California at Berkeley. Retrieved from http://www.eecs.berkeley.edu /Pubs/TechRpts/2015/EECS-2015-36.html

Paducheva, E. V. (2004). *Dinamicheskie modeli v semantike leksiki* [Dynamic models in the semantics of vocabulary]. M.: Jazyki slavjanskoj kultury. 608.

Pinborg, J. (1977). *Sigerus de Cortraco. Summa modorum significandi* [Sigerus of Cortracum. The sum of the modes of signifying]. Sophismata. Amsterdam; Philadelphia: John Benjamins Publ. 108.

Plungjan, V. A., Rahilina, E. V. (1998). Paradoksy valentnostej [Paradoxes of valencies]. *Semiotika i informatika*. otv. red. V. A. Uspenskij. M. : Jazyki russkoj kultury; Russkie slovari. 36. 108–119.

Pustejovsky, J. (1998). *The generative lexicon*. Cambridge, MA: The MIT Press. 312.

Radden, G., Kövecses, Z. (1999). Towards a theory of metonymy. *Metonymy in language and thought*. eds. K.-U. Panther, G. Radden. Amsterdam; Philadelphia: John Benjamins Publ. 17–60.

Rahilina, E. V. (2002). Osnovnye idei kognitivnoj semantiki [Main ideas of cognitive semantics]. *Sovremennaja amerikanskaja lingvistika: Fundamentalnye napravlenija*. pod red. A. A. Kibrika, I. M. Kobozevoj i I. A. Sekerinoj. 2-e izd., ispr. i dop. M.: Editorial URSS. 370–389.

Roos, H. (1952). *Die "Modi significandi" des Martinus de Dacia: Forschungen zur Geschichte der Sprachlogik im Mittelalter* [The "Modi significandi" of Martinus de Dacia: Research on the History of Language Logic in the Middle Ages]. Münster: Asschendorffsche Verlasbuchhandlung; Kopenhagen: Arne Frost. 167.

Skarabela, B., Srinivasan, M., Rabagliab, H. (2017). The development of a generative lexicon: Evidence from instrument verbs. *A Handbook of the 42-nd Annual Boston University Conference on Language Development*. Boston: Boston University. 77.

Talmy, L. (2000). *Toward a cognitive semantics: in 2 vol*. Cambridge, MA: MIT Press, 2000. Vol. 1: Concept Structuring Systems. 565; Vol. 2: Typology and Process in Concept Structuring. 503.

Taylor, J. R. (1995). *Linguistic categorization. Prototypes in linguistic theory*. Oxford: Clarendon Press. 312.

Therriault, D. J., Rinck, M. (2007). Multidimentional situation models. *Higher level language processes in the brain: inference and comprehension processes*. eds F. Schmalhofer, C. A. Perfetti. Mahwah, NJ: Erlbaum. 311–328.

Traugott, E. C., Dasher R. B. (2005). *Regularity in semantic change*. Cambridge: Cambridge University Press. 341.

Wierzbicka, A. (1980). *Lingua Mentalis: The semantics of natural language*. Sydney; New York : Academic Press. 367.

Wierzbicka, A. (1992). *Semantics, culture, and cognition: Universal human concepts in culture-specific configurations*. Oxford; New York : Oxford University Press. 496.

Wilkins, J. (1668). *An essay towards a real character and a philosophical language*. London : S. Gellibrand. 627.

**Бібліографічний опис:**

Деменчук, О. В. (2018). Моделювання семантики лексики в аспекті міжмовних досліджень. *Науковий часопис Національного педагогічного університету імені М. П. Драгоманова. Серія 9 Сучасні тенденції розвитку мов*. К. Вип. 17. С. 32–42. DOI: https://doi.org/10.31392/NPU-nc.series9.2018.17.03

***Анотація***

*У статті схарактеризовано модель концепту ситуації – репрезентацію, яка є основою зіставлення (tertium comparationis) семантики лексики різного ступеня споріднених мов. Сформульовано гіпотезу про те, що модель концепту ситуації відтворює зміст лексичної одиниці за зразком багатовимірного концепту. Релевантність моделі концепту ситуації як репрезентації багатовимірного семантичного простору верифіковано за результатами методики суб'єктивного шкалювання. Концепт ситуації представлено у вигляді конфігурації семантичних мовних вимірів – характеристик плану змісту мовної одиниці, які кодують інформацію про певний аспект концептуалізації ситуації або її фрагмента. З'ясовано, що семантика лексики зіставлюваних мов (англійської, німецької, польської та української) кодує та розподіляє інформацію між чотирма семантичними мовними вимірами: репрезентативним, сентенційним, конструкційним та епідигматичним. Обстоюється ідея, що репрезентативний семантичний вимір кодує інформацію про пізнавальну цінність учасників ситуації, сентенційний – про набір та характер відношень учасників ситуації, конструкційний – про ступінь позиційної активності або важливості учасників ситуації, епідигматичний – про семантичні асоціації учасників ситуації. Для визначення змісту наповнення концепту ситуації та встановлення особливостей кодування і розподілу інформації в семантиці лексики застосовано спрямований асоціативний експеримент. У перспективі відтворення специфіки національно-мовної картини світу визначається доцільність подальших психолінгвістичних досліджень семантичних моделей лексики.*

***Ключові слова:*** *семантичні моделі, семантичні виміри, модель ситуації, концепт ситуації, учасник, tertium comparationis, метод суб'єктивного шкалювання, спрямований асоціативний експеримент.*

**DOI:** https://doi.org/10.31392/NPU-nc.series9.2018.17.04
**UDC:** 81'367.625(161.2=111):81-115

**Natalia B. Ivanytska**
Vinnytsia Institute of Trade and Economics
of Kyiv National University of Trade and Economics,
Vinnytsia, Ukraine

**Nina L. Ivanytska**
Vinnytsia Mykhailo Kotsiubynskyi State Pedagogical University,
Vinnytsia, Ukraine

# SYNTAGMATIC DIMENSION OF UKRAINIAN AND ENGLISH VERBS: THE TYPOLOGY OF EXPONENTS OF CORRELATION

**Bibliographic Description:**

Ivanytska, N. B., Ivanytska, N. L. (2018). Syntagmatic Dimension of Ukrainian and English Verbs: the Typology of Exponents of Correlation. *Scientific Journal of National Pedagogical Dragomanov University. Series 9. Current Trends in Language Development*. K. 17. 43–56. DOI: https://doi.org/10.31392/NPU-nc.series9.2018.17.04

***Abstract***

*The paper focuses on the syntagmatic dimension of the Ukrainian and English verbs. The syntagmatics of the verbs is analysed from the cross-linguistic perspective. The approach to the bilateral contrastive study of the verbs is based on the essential notions of contemporary contrastive linguistics. The key factors determining the combinability of the word are analysed. The work contains a brief overview of the theories that differentiate syntactic, semantic and lexical syntagmatics. The factors proved that syntagmatic relations are of syncretic nature, especially within verbal classes. It is necessary to combine semantic and grammatical aspects of combinability. The work focuses on the concept of valency which is believed to be relevance for cross-linguistic analysis of syntagmatic parameters of the verbal systems. It was found out that the combinability potency of the verb determines the specificity and regularity of the syntagmatic relationships that arise in the process of functioning of the verbal systems of both the Ukrainian and English languages. The authors present typology of the formal exponents of correlation that seems promising for revealing isomorphic and allomorphic characteristics of the contrasted verbs. The exponent of correlation is believed to be an effective tool for building syntagmatic paradigm of the verbs from the contrastive perspective. The typology of the exponent of syntagmatic correlation contains non-verbalized (zero) and verbalized (non-predicative /*

*predicative / semi-predictive, synthetic / analytic, simple / complicated, one-position / multi-positional) units that form the corresponding paradigmatic series in the comparable languages.*

***Keywords:*** *an exponent of s correlation, verb's systems of Ukrainian and English, combinability, syntagmatics, typology of the exponents of correlation.*

### *1. Introduction.*

Modern comparative linguistics is considered to be a complex area of study comprising different fields (comparative and historical, typological, universal linguistics). The importance of identifying universals and conceptual distinctions in languages has been mentioned by well-known linguists (Korolyova 2014; Abraham 1989; Cruzo 2016; Filipovic 2017). Cross-linguistic studies from a contrastive perspective have great advantages over other approaches to language comparison. On the other hand, the contemporary linguistics focuses deeply on the syntagmatic relations between words. Traditionally, syntagmatic processes are viewed as linear, "horizontal", in contradistinction to paradigmatic processes, which deal with "vertical" or alternative substitutions in a phrase. The relations of coexistence and sequence have a long linguistic history. The works of Ferdinard de Sasussere, Baudouin de Courtenay, M. Krushevskyi started the structural approach to the language. European scholars (the Geneva School of Albert Sechehayle and Charles Bally, The Prague School of Roman Jakobson and Nikolai Trubetkoi, the Copenhagen School of Louis Hjelmslev, the Paris School of Algirdas Julen Greimasand) as well as American linguists (Leonard Bloomfiels, Charles Hockett, Noam Chomsky) were challenged by the key points of structuralism. It should be noticed that syntagmatic and paradigmatic relations provided the structural linguists with a tool for categorization the language items.

Combinability is concerned to be a key point for syntagmatic studies. The approaches of using this notion are rather different and each of them has its own methodological framework. For example, Western linguistics tends to use a notion of valency as a crucial stage for revealing syntagmatic relations. The invention of valency if often associated with French linguist Lucien Tesniere, whose Esquisse d'une syntaxe structurale appeared in 1953 (Tesniere 1953).

Tesniere's notion of valency has been studied and developed in continental Europe, especially Germany, since the 1960s. They say that the idea of valency is close to the "dependency theory" (J. Ballweg, U. Engel, B. Engelen, H-J. Heringer, J. Kunze, H. Schumacher, and H. Vater) and was the basis for developing Case Grammer of Ch. Fillmore (Fillmore 1968). The latter highlighted the fact that syntactic structure was predicted by semantic participants (an agent, a patient, purposes, locations, and so on). These participants called "cases" are corresponded with semantic roles (thematic relations) and have identity with theta roles of generative grammar.

London School of Linguistics (L. R. Firth, W. Sidney, M. A. K. Halliday) contribute the linguistic studies the situational theory of meaning in semantics. The terms "collocation" and "colligating" are used there to describe the co-occurrence of lexical items (in contrast to the notion of essential semantic relations by B. Portsyhe and lexical solidarity by E. Koseriu).

American descriptive linguistics point out the concept of distribution, or the environment of a linguistic unit, as an implemented linear series without taking into account the paradigmatic aspect (Hartmann 1991: 2856). Theories of compatibility have found an active development in linguistics (Kuznecova 1975; Perebyinis 2000; Slyusareva 1986; Stepanova 1978; Shirokova 2000). The contemporary theories and concepts attempt to indicate the key factors determining the combinability of the word, and to differentiate syntactic, semantic and lexical syntagmatics (Kubryakova 2004: 448).

Syntactic syntagmatics is a relatively new field of study, reflecting the functional approach to language, i.e. the description of connected speech, or discourse. Syntactic syntagmatics focuses on the regularities of the syntactic combinability of formal, positionally determined units. The rules of syntactic syntagmatics are built on the combination of grammatical classes of words in speech in the aspect of their formal expression (Ivanytska 2006; Stepanova 1978; Shirokova 2000). The scholars who work in this field use such concepts of syntactic syntagmatics as syntactic relationships and syntactic links. These notions are believed to be basic units for the syntagmatic syntax (Zahnitko 2011: 34). Syntactic syntagmatics is qualified as a set and conditions for the implementation of the syntactic links of a word, the combinability of certain grammatical categories of words.

The main achievement of semantic syntagmatics is the creation of the law of semantic agreement (iterations of the semes, imbrication, extension of a seme). The theoretical qualification of this law is built on the works of Western European and American as well as Eastern European linguists (Apresyan 1995: 45; Arutyunova 1980: 158; Kocherhan 1984: 27). The scholars give the grounds of semantic combinatorics (semantic agreements). They backed up their conclusions and presented the rules of semantic composition (Ch. Osgood), borrowed from the theory of grammatical pleasanism, compulsory repeatability of meanings (M. Masterman), doubling of meaning and semantic compression (N. M. Leontieva), semantic synthesis (Yu. D. Apresyan, I. O. Melchuk), the syntagmatic interaction of meanings, the identification of the so-called iterative semes as a formal way of organizing syntagma and semantic agreement (V. G. Hak), etc.

The subject of lexical syntagmatics is mostly considered to be "lexical syntax", that is, the lexical compatibility of words in a linear series, in contrast to the "grammatical" syntax (Ufimtceva 2002: 138). In this context, a detailed description of the syntagmatic characteristics of units at the level of word in the is developed in the theory of I. O. Melchuk "Meaning ↔Text" (Melchuk 1974). The lexical syntagmatics also relates to the realized ability of a word to be combined in a text with a limited number of words without special emphasis on common semantic signs, a concrete realization in the speech of the valence of a word, a combination in the text of semantically related words, the ability of a word to combine with other words in the text (Kiselyova 2000).

Contemporary linguistic works tend to a complex, level-to-level study of syntagmatic properties of linguistic units in general and verbs in particular. In this way, scholars argue that the functioning of language as a system is possible only under conditions of close interaction and coexistence of all its elements. In this context, more and more emphasis is placed on the syncretic nature of syntagmatic relationships, especially within verbal classes. The scholars point out that it is necessary to combine the semantic and grammatical aspects of combinability and bring into use such definitions as semantic-syntactic, semantic-grammatical, lexicosyntactic, lexico grammatical combinability, etc.

It should be noted that there is coexistence and sometimes undifferentiated use of a number of notions, in particular, "combinability", "combinatorics", "combination", "communicative clutch", "semantic potency", "syntagmatics", "collision and collocation", "semantic or lexical selectivity", "context", "valency'', "distribution", "intention", "configuration", etc. Despite the different theoretical basis all these notions reveal the general property of the notional words - the contextual opportunities of combinability. At the same time, contemporary linguistics tries, on the one hand, to distinguish the notions and attempt to synonymize them, on the other hand.

We stick the opinion that such notions as "valency / combinability", "valency / distribution", "combinability / distribution", "valency / intention" are believed to be contiguous, but not identical in their essential and functional capacity. In particular,

traditional distinction between valency and combinability is based on the distinguishing between potency / realization (language / speech) (Vykhovanets 1992; Ivanytska 1986). The distinction between valency and distribution is based on the ratio of the typical and concrete (situational) semantic environment (Teoriya 1985). In other words, the potential character of valency is opposed to the breadth of distribution that covers the syntactic function of the word, its position in a sentence, using in a context, that is, outside the sentence. The differentiation between such definitions as "combinability" and "distribution" is based on the distinguishing between limited / unlimited realization of a word's semantics. "Valency" and "intention" are supposed to be relevant, but not identical. The valency has syntactic character while intention has semantic one. O. I. Leuta, having examined in detail the distribution theory, followed by Y. F. Andersh, undoubtedly points out that the valency-intentional potential of the verb, which in his concept appears as one of the ways of describing the verb sentence, encompasses the totality of all functional-syntactic (valency) and functional-semantic (intentional) positions of the verbal lexical-semantic variant (Leuta 2008: 62).

***2. Aim and Objectives.***

Our research focuses on the typology of the formal exponents of syntagmatic correlation that seems promising for revealing isomorphic and allomorphic characteristics of the Ukrainian and English verbs. The aim of our study emphasises such controversial issues as:

– to identify the notion "exponent of syntagmatic correlation" from the cross-linguistic perspective;

– to give the proofs for using the exponents of correlation as special tool for building the syntagmatic series in the comparable languages;

– to demonstrate the ability of exponents of syntagmatic correlation to be *tertium comparationis* for cross-linguistic study of the verbs.

***3. Results.***

Our study is believed to suggest a new approach to the verb's syntagmatics from the cross-linguistic perspectives. We propose the bilateral way for estimation the syntagmatic correlation between Ukrainian and English verb's systems. The methodological framework of our study has grounds for revealing formal exponents of syntagmatic correlation of the contrasted Ukrainian and English verbs. The typology of the exponents of syntagmatic correlation is based on the contemporary syntax approach that comprises combinability and valency theory.

In the context of our research we are close to the concept of valency according to which valency is viewed as the ability of a word to determine the quantity and quality of dependent words, due to its semantic and grammatical properties. The notion of valency appears relevant to the solution of the above problems in the field of cross-lingual analysis of syntagmatic parameters of comparable verb's systems. We stick to the opinion that potential combinability of a word is an essential factor that determines the specificity and regularity of the syntagmatic relationships that arise in the process of functioning the verb's systems in the Ukrainian and English languages.

The contemporary interpretation of verb's valency is based on the Western European, in particular, French and German, linguistic theories of narrow (that is verbal) study, traditionally connected with the verbal-centric theory of a sentence. This theory was widespread in the concepts of East Slavic linguists (Andersh 1987; Gak 1972). English linguists also discussed the problems of the valency potential of a verb, (Abraham 1989; Fillmore 1992; The Verb 2006). Explaining the notion of valency, which was originally correlated with the grammatical (formal) level and the definition of the quantitative set of participants in the situation, the researchers also emphasize the semantic (lexical, semantic-

logical) aspect of valency, defining the obligatory and optional, external and internal, content and formal valency (Kacnelson 2001).

It is also important for our study the thesis that valency as systemically predictable combinability (in particular, verbal) is represented by a subordinate syntactic connection as one of clause-generating connection (Vykhovanets 1992). Such a connection is a formal factor that enables to make the syntagmatic parameterisation of verb's systems. The syntagmatical classification of the verb is based on the number of factors: predictability / unpredictability, obligation / optionality, expediency / inexpediency, sufficiency / insufficiency, etc. The distinction of these factors is connected with the valency potential of the verbs. The force of this subordinate connection has become a criterion for the classification of the verbs into the units with mandatory / non-mandatory complements and distinguishing between autosemantic / synsemantic units. Comparison of the autosemantic / synsemantic verbs can show their correlation in capability to nominate procedural denotations.

Thus, the syntagmatic parameterisation of the Ukrainian and English verb's systems can have several dimensions: syntactic, semantic and lexical. There are attempts to combine these aspects of syntagmatic measurements.

***4. Discussion.***

***4.1. Exponents of Syntagmatic Correlation in the Ukrainian and English Verb's Systems: Cross-Linguistic Perspectives.***

To start a cross-linguistic comparison of syntagmatics of the Ukrainian and English verb's systems we are consistent with some key guidelines. Syntagmatic correlation can be revealed by formal expressions. These formal verb's characteristics can be non-verbalized (zero) and verbalized (non-predicative / predicative / semi-predictive, synthetic / analytic, simple / complicated, one-position / multi-positional) units that form the corresponding paradigmatic series in the comparable languages.

To start a discussion, it is necessary to point out that in our study we use the term "exponent" in the meaning "a linguistic unit that realizes another, more abstract unit" (Oxford Dictionary URL: http://dictionary.oed.com). It should be noticed we differentiate narrow and broader (generalized) meanings of the term in the context of our study. The narrow meaning of the notion "exponent" is estimated and does not go beyond the expressive means (formal representations, formal reproduction, formal expression) of the corresponding categories or their semantic variants of a particular language. Within the verbs of a particular language, the interpretation of the term "exponent" has variation due to the number of the verbs. For example, the Ukrainian informatively insufficient verb "могти" has a specific exponent – infinitive form of the verb that completely accompanies this verb. This is believed to be a syntagmatic unambiguous morphological form-exponent of the informative insufficiency verb (*могти*). This exponent of the verb's meaning is considered to be a formal exponent of a specific verb. The higher degree of abstraction is inherent in exponents of the corresponding categorical meanings, which are based on the plurality of verbs' variants (in a specific language). Thus, we can assume that in Ukrainian the exploratory of informatively insufficient verbs is their absolute syntagmatics, which is manifested in the syntagmatic series of combinations of corresponding verb variants with infinitives: *могти, мусити, зволити, перестати* + (infinitive form). Such exponents cover the formal meanings of intra-language categories and can be used in the study of one language.

We stick to the opinion that exponents always reflect denotata characteristics. In our study they are oriented on a procedural denotata. The reproduction (naming) of a procedural denotata by the means of a particular language is an exploratory paradigm of the language, its lexical-grammatical resource capability that has a theoretical value. For example, Ukr.

*рухатися* denotes procedural denotata by the explicated system of specific phonemes. The Ukrainian verb *хвалити* does not have enough strength to express the procedural denotata; it needs some more language means for it and predict the obligatory substantive complements (*хвалити кого-н.*: *товариша, друга, брата* etc.). The substantive units expressed by the indicative case form serve as a formal exponent of verbal synsemantics of the Ukrainian verb *хвалити*.

The term "exponent of syntagmatic correlation" has got a specific meaning from the cross-linguistic perspective. In the regard of contrastive study of syntagmatics of the Ukrainian and English verb's systems the essence of the notion "exponent (exponent = "form of expression" = "the way of representing something") is sustained in the complex term "exponent of correlation". Yet we consider it a rather bit differently. We expand (distribute) it on the similar units of the comparable languages (Ukrainian and English). In this regard, the term "exponent" gets another interpretive status. We use it as a specific tool that helps to reveal "formal expression (formal representation) of something" that can be absolutely identical (isomorphic), partly shared or missed in the comparable languages. In this sense, the "exponent of syntagmatic correlation" can be a *tertium comparationis* (Ivanytska 2011).

The exponents of syntagmatic correlation from the cross-linguistic perspective are based on the comparison of the syntagmatic indexes of the verbal forms. This approach focuses on the valency of a verb and theories of combinability, and syntagmatic dependencies. To start a comparative analysis, it is necessary to put attention on such notions as "obligatory formal-syntactical component", "compensator of semantics", "necessarily component determined by a verb", "obligatory distributor", which generally identify the identity with the term "exponent".

Ukrainian studies use a notion "verb-determined, obligatory constructive element of the formal-syntactic sentence structure". This obligatory component is considered to be a non-predicative unit (a word, a combination of words, a phrase) when we analyse a simple sentence. If we focus on the complex sentence this component is viewed as a predicative unite.

Taking into account various formal-grammatical (formal-morphological and formally-syntactic) means of explication that are relevant to the comparison of verbs' systems of the Ukrainian and English languages, we regard them as formal exponents of correlation. The basic classification parameter of the analysis is the presence / absence of obligatory components that makes it possible to reveal syntagmatic correlations from the cross-linguistic perspective. This parameter allows us to distinguish between verbs with zero distribution, or the verbs with zero exponents and the verbs with verbalized (expressed) exponents.

***4.2. The Exponents of Syntagmatic Correlation: Autosemantic Verbs.***

Zero exponents are pertained to the Ukrainian and English autosemantic verbs. To consider specific sentence structures for the purpose of distinguishing verbs with zero forms of distribution, we adhere to the principle of strict separation of obligatory / optional adverbial components determined by verbs in the formal-syntactic sentence structure. We analyse unextented verbal sentences like Ukr. *Вітер ущух; Він хоче вмирати. Він хоче жити* (М. Коцюбинський); Eng. *I shall never recover* (R. Stevenson); *He was laughing* (M. Scott); *I should have died* (C. Dickens); *I'm not joking* (J. K. Jerome). We analyse also extended sentences with optional verb-determined components: Ukr. ***Перед вікнами*** *шуміли дерева, спалахували короткі блискавки* (Ю. Мушкетник); ***Над*** *Солотинським* ***яром*** *розтанув останній промінь,* ***у лісі*** *почало темніти* (М. Хвильовий); Eng. *Weeds have risen* ***overnight****; New building are rising* ***every day; Once more****, the two spectators*

*started* […] (C. Dickens); ***After supper*** *you cannot smoke* (J. K. Jerome); ***Here*** *he walked* ***even faster than before*** (C. Dickens).

The contrastive analysis proves that zero exponents of cross-linguistic syntagmatic correlation specifics three major categorical meanings of the verbs. To prove the idea there are examples.

| | |
|---|---|
| Ukr. *Папуги* ***вміють говорити -***<br>Eng. *Parrots* ***can talk;***<br>Ukr. *На вулиці* ***співали*** *пташки –*<br>Eng. *The birds* ***were singing*** *outside ;* | subcategory<br>"process-action" |
| Ukr.. *Конверт* ***не заклеюється -***<br>Eng. *The envelop* ***will not stick;***<br>Ukr. *Хворі* ***страждають -***<br>Eng. *Sick people* ***suffer***; | subcategory<br>"process – state" |
| Ukr. *Вода і масло* ***не з'єднуються*** –Eng. *Water and oil* ***will not unite*** | subcategory<br>"process – relation" |

We find most correlative structures in the field of the autosemantic verbs that denote the following microcategories:

1) "action-sounding": Ukr. ***Загавкало*** *собача* (О. Гончар); *Коти збіглися звідусіль і відчайдушно* ***нявкали*** (В. Малик); *Пес тривожно в буді* ***скавулів*** (Г. Чубач); *Ворон* ***крумкнув*** *удруге* (О. Донченко); *Польові коники* ***дзизкотіли*** *в стерні* (Г. Тютюнник); Eng. *Another dog* ***began to bark****, this time inside the house* (R. Black), *The dogs* ***snarled*** *and cowered about his ankles* (A. Ellis); *The piping stopped abruptly and a horse* ***neighed*** (N. Bawden); *A cat, black and fat,* ***mewed*** *softly* (L. Alcott); *The lion* ***was roaring*** (A. Grey); *Bells* ***ring,*** *or* ***warble,*** *or* ***bleep,*** *almost everywhere: on aircraft, in cars, in trains, in the street, in restaurants, even in concert halls* (G. Landley);

2) "state – physiological state": Ukr. *У неї* ***боліла*** *голова* (І. Ле); *Праве плече нестерпно* ***нило*** (І. Цюпа); *Серце боляче* ***защеміло*** (В. Підмогильний); Eng. *My head* ***aches*** *all the time* (N. Williams); *He* ***began to sob*** *and then* ***shudder*** *under the weight of his grief* (K. Dayus);

3) "state being (existence)": Ukr. *Ми* ***хочем жить****!* (Б. Лепкий), *Як почує товариство,* ***не животіти*** *тоді мені* (Панас Мирний); *Ну як же* ***можна*** *матері* ***вмирати,*** *коли життя в неї не було* (А. Чубинський); Eng. *Without oxygen, the heart* ***will fail*** *and the brain* ***will die*** (R. Black); *She walked to work, hoping that the troubles of the day before* ***had vanished*** *with the night* (A. Ellis); *They* ***had existed*** *long before it: they* ***were to exist*** *long after it* (A. Grey);

4) "state – optical quality": Ukr. *Серед степу* ***блищав*** *Дніпро* (О. Довженко); ***Іскрилися*** *вкриті снігом узгір'я* (І. Ле); *Внизу, вибиваючись із ряски,* ***лисніло*** *на сонці брудне плесо* (Є. Гуцало); Eng. [...] *the moonlight* ***sparkles*** *on the snow* (M. Connel); *They* ***glinted*** *in the torchlight* (J. Yeovil); [...] *her eyes* ***glittered*** *terribly* (G. Cross); *The summer pipers* ***have flickered*** (A. Ellis);

5) "state – movement": Ukr. *Он* ***проїздить*** *колона танків* (І. Вільде), ***Летить*** *комета* (Л. Костенко); ***Пливуть*** *гуси* (Остап Вишня); *Глухо* ***човгав*** *вартовий* (Б. Харчук); *Eng. He* ***walks*** *round the streets that first morning* (M. Frayn); *Next morning I*

***limped*** (D. Francis); *Besides, if it looks right, it* ***will fly*** *right, and this machine looked right* (M. Falk).

At the same time, we notice that when we have elliptical sentence the non-verbalized (zero) exponents are rather relative. They can be verbalized easily due to the substantial semes in the semantic structure of the verbs: Ukr. *Дитина спить*? *Я піду* ***перевірю*** (В. Канівець) / Eng. *Is the baby asleep? I'll just go and* ***check*** (P. Pope) (*перевірю + що? = перевірю, чи дитина спить; check + what? = check if the baby is asleep); Вони ж повинні були прийти. Я* ***не розумію*** (О. Десняк) і англ. *Where is the water? I* ***do not understand*** *(не розумію + що? = розумію, чому вони не прийшли;* (*to not understand + what? = to not understand where the water is*).

Thus, the exponents of correlation of autosemantics have unverbalized forms, which is due to the closed nature of such verbs. If the autosemantic units denote the correlative denotative features within the subcategories "process-action" and "process-state", zero exponents of correlations formalize the correlation between the verbal units being compared, or their classes, which indicates the isomorphism of the syntagmatic parameters in the pair of correlates.

***4.3. Typology of Exponents of Syntagmatic Correlation: Synsemantic Verbs.***

Syntagmatics of Ukrainian and English synsemantic verbs in verbal phrases and semantic unions reveals various exponents of verb's synsemantics. Qualitative and quantitative indicators of these exponents can be corresponding parameters of contrastive study of verb's systems. The typology of exponents of correlation in the systems of the synsemantic Ukrainian and English verbs is based on the following intra-language formal characteristics: 1) non-predicative / predicative / semi-predictive constructive elements as compensators of verbal synsemantics; 2) synthetism / analytism; 3) uncomplicated / complicated; 4) the number of expressed strong verb's positions; 5) morphological status.

***4.3.1. Non-Predicative / Predicative Exponents of Syntagmatic Correlation.***

The basic criterion "non-predicative / predicative / semi-predicative" allows revealing the constructive components that can be compensators of verbal synsemantics. Thus, we can distinguish non-predicative, predicative and semi-predictive exponents of correlation in the field of the synsemantic verbs. The first and the second exponents pertain to the verbal systems of the two comparable languages, and the latter serves as a specific feature of the English verbal system. Non-predicative exponents of verbal synsemantics are lexical-grammatical formal means that are strongly determined by the verb in semantic units and create mainly "actual verbal phrase" in the structural syntax (the term of I. R. Vychovanets), or "semantic unity" (the term of N. L. Ivanytska): Ukr. *виконувати* (що?) ***план,*** *розташовуватися* (де?) ***на галявині,*** *змилуватись* (над ким?) ***над потерпілим;*** *позбавитись* (чого?) ***недоліків*** і под.; Eng. *to shine* (what?) ***boots,*** *to shock* (whom?) ***everyone,*** *to sign* (what?) ***a document,*** *to sing* (what?) ***a hymn****, to remember* (what?) та под.

Predicative exponents are also used in complex sentences. They are combined with synsemantical verbs. These predicative "compensators" of verbal semantics have significant differences in comparison with non-predictive obligatory distributors in terms of the expression of procedural denotations in both languages. Predictive exponents are supposed to be not nominees of substantive denotata, but express the whole situation in naming the denotata.

We can reveal some types of the predicative exponents of syntagmatic correlation: 1) subordinate clauses of compound sentences that function as compensators for verbal synsemantics: Ukr. *Хотів би я знати,* (що?) ***про що той струмочок у мріях своїх гомонить між травою*** (П. Тичина); Eng. *Sister asks* (what?) ***if you will come to help*** (M. Ripley); 2) subordinate clauses of conjunctionless complex sentences: Ukr. *Як іду поміж вас, чую:* (що?) ***крила ростуть за плечима і душа для польоту в незвідане їх***

***розкриває*** (Н. Гнатюк); Eng. *I though* (what?) ***you would come by this train*** (W. Maugham); [...] *but we insist* (what?) ***he must stay awake to eat*** (D. Lodge); 3) sentences with direct speech: Ukr. "***Ти молодий, чому ж ти не піднімеш тої зброї, що батькові зі старечих рук упала?"*** - *закликала (*до чого?) *вона* (Леся Українка); Eng. „***Oh! Will you open it (the little) and put my mind at rest, father?"*** – *she implored* (what?) (A. Cronin).

Semi-predicative exponents of synsemantics are specific for the English verbal system, e.g.: Eng. *Everybody expected* ***her to marry him****? Ukr. Всі сподівалися,* ***що вона одружиться з ним***. The essence of the term "semi-predicative" in our study is somewhat different from Ukrainian linguistics. The Ukrainian scholars use it for the qualification of structures that are not part of the positional and syntactic sentence structure (Vykhovanets 1992). Within the framework of this study the semi-predicative exponents are considered to be the specific units that contain formal means of expressing semantic content in comparison with the corresponding subordinate clauses. The formal features of the semi-predicative exponents, in particular, the inconsistency of subjective-predicate relationships in the structure, are associated with the phenomenon of secondary predication, the revealing predicate's actants, sentential complement, etc. (Aryutunova 1999). English scholars consider the structures of secondary predication as non-finite clauses" (Leech 2004) or "subjectless non-finite clauses and non-finite clauses with the subject" (Goddard 2001), without distinguishing between the semantic non-elementality and structural (formal) complication, but not the complexity of such sentences.

The functioning of semi-predicative structures as a kind of compensators of synsemantics from the cross-linguistic perspective is determined not only by the synsemantic nature of a verb, but also by the typological features of the language. While the Ukrainian language doesn't use semi-predicative exponents of synsementics regularly English takes advantage of these exponents and examines them as peculiar superstitious complement of the so-called original predicate-synsemantic verb.

The formal expression of this sententious complement, that is traditionally named Comlex Object, or Nexus Object is based on the combinability of substantial and verbal non-finite (infinitive, participle) forms: S*he wanted* ***him to suffer*** *as much as possible* (N. Bawden); *Philip wanted* ***her to go*** (M. Connell); *I heard* ***her carriage arriving*** (G. Cross); *I watched* ***my fingers fade*** *before my face* (R. Elliot). The complexes that are forms can be rather complex due to structural or communicative purposes. The obligatory or optional distributors of a non-finite verb can take the position of latent, implicant, predicative actant: *He wanted* ***me to pass on a message to the police*** (A. Ellis); *She heard* ***him climb out of bed, and go to his own room*** (M. Falk); *Just then they noticed* ***a woman walking towards them*** (M. Frayn); *I desperately wanted* ***him to see the right "way to go"*** (A. Hassall); *In fact we expected* ***them to solve the problem for us*** (M. Binchy).

***4.3.2. Synthetic / Analytical Exponents of Syntagmatic Correlation.***

The criterion "synthetism / analytism" classifies the exponents of verbal synthemantics into synthetic (one-word structure) and analytical (some words structures).

In most cases, both Ukrainian and English verb's systems possess synthetic exponents of synsemantics that is represented by a substance (including substantiated) nomination: Ukr. *Розповідь моряка захопила* ***хлопчиків;*** *Мандрівник розповідав* ***про*** *свої* ***пригоди;*** *Вітряки з дитячих літ приваблювали* ***Христину*** (М. Стельмах); Eng. *Bella married* ***a butcher*** *who displayed her* ***photographs*** *while she charmed* ***the customers*** *in the same way she had charmed* ***the stars*** (D. Vernon).

The correlation capacity of the exponents in analytical constructs in both languages is based on the common properties of notional words that function as components of semantic unities in strong verb-determined positions. They lose their meaning and accumulate a

quantitative measure of the expression of a substantive denotatф denominated by a determined word, often a noun: Ukr. *Юний друже, через книгу ти пізнаєш* ***багато нового, незвичайного*** *й* ***прекрасного*** (І. Цопа); *Чужий голос увірвався* ***в коло*** *його* ***думок*** (Леся Українка); *Хазяйка спекла* ***штук з п'ять картоплин*** (А. Хижняк); Eng. *Richard saw* ***a flood of wagons, trucks, cabs, vans*** *and* ***street-cars*** (O. Henry); *Mary gave him* ***a*** *tin* ***basin of water*** *and* ***a piece of soap*** (M. Twain); *He opened* ***a*** *small* ***can of apricots*** (E. Hemingway); *I stayed but* ***two months*** *with my wife and famiIy* (J. Swift); *I spent* ***many days*** *alone in my room* (J. Escott).

The Ukrainian and English synsemantic verbs contain specific (peculiar) analytical exponents of verbal synsemantics. English has nominal phrases with prepositions while Ukrainian uses nouns without prepositions in generic case. The interconstructive relations are based on the dependence of the noun forms of these unities. The analyticity of such exponents is determined by the formally dependent component of semantic unity. It also manifests itself in the structural-semantic nature (structural-semantic or informative insufficiency of the first element of unity). In such cases, the content of unity is shifted from the first element to the second (dependent): Ukr. У *безкрайому* ***океані звуків*** *неповторно звучить мелодія рідної мови* (А. Коваль); Eng. *Clearly, it's time someone gave you* ***a bit of advice*** (J. Rose).

It should be noticed that the English exponents that are expressed by semi-predicative non-finite complexes (Complex Object) are supposed to be specific to compare with the Ukrainian language: *They asked* ***me to tell you this*** (E. Hemingway); *I expect* ***Father has written to you*** (W. Maugham).

***4.3.3. Uncomplicated / Complicated Exponents of Syntagmatic Correlation.***

The criterion "uncomplicated / complicated structure" classifies the syntagmatic verbs into simple and complex. We emphasise on the closed formal and semantic nature of the obligatory distributor (in most cases non-predicative and semi-predicative). To prove the idea there are example. The predicative exponents expressed by autosemantic verbs are believed to be simple (they don't need to be distributed by obligatory components): Ukr. *Старий* ***вечеряти*** *просить* (Марко Вовчок); *Повезли діда* ***вмирати*** *в своє село* (А. М'ястківський); Eng. *He remained late* ***to chat*** *and* ***drink*** (L. Alcott); *She has gone* ***to cry*** *outside* (R. Blackmore); *We come here* ***to live*** *and not going to leave* (R. Green). While the exponents of synsemantic verbs in the following sentences need obligatory components for fulfilment the utterance: Ukr. *У мами вони просять* ***дати їм*** *свої* ***чоботи*** (У. Самчук); *Могутні Святогори та Микули виходять* ***внука*** *з космосу* ***стрічать*** (А. Малишко); Eng. *He promised* ***to abstain from smoking*** (M. Twain); *Some English boys and girls are coming* ***to see me*** *tomorrow* (L. Alcott).

The complexity of the exponents appears when non-predicative obligatory verb-determined components are expressed by infinitives: Ukr. *Та закордон ще приїде до вас, приїде* ***подивитися на*** *вашу* ***ніч*** *під небом* [...] (О. Довженко); Eng. *Finally she decided* ***to come to Greece*** *again* (D. Lodge); *One day he arrived* ***to give a new-born filly post-foaling antibiotic and tetanus cover*** (D. Vernon); *They failed* ***to achieve*** *their* ***objectives*** (J. Hook).

The exponents of synsemantics have tendency to be complex when they are expressed by a synsemantic noun (in Ukrainian) and the Gerund (in English): Ukr. *Острозька Біблія поповнила численну* ***колекцію*** *старовинних* ***першодруків*** (З газ); *Нині в людини виникає природна потреба* ***убезпечити*** *майбутні* ***покоління від помилок минулого*** (З газ.); Eng. *She avoided* ***looking at him*** (T. Vicary); *She risked* ***putting the lamp on*** (E. Blair); *I mostly enjoyed* ***staying with*** *my* ***friends*** *away from home* (R. Butters).

The English language has complex exponents of synsemantics in the semi-predicative structures with non-finite verbs if the latter are synsemantic: *He expected* ***her to trust him***

(R. Kee); *I have heard* ***him criticising his players*** (P. Holton); *Icould not understand what they were shouting, but I heard* ***them throwing things*** (A. Grey).

***4.3.4. One-Positon / Multi-Position Exponents of Syntagmatic Correlation.***

The criterion "the number of expressed strong verb's positions" classify the exponents of synsemantics into the one-positon and some-position.

One-position exponents of correlation of the Ukrainian and English verbs are non-predicative or predicative constructions (synthetic or analytical, simple or complex) that fill only one strong verbal position in the structure of two-component sematic unions for balancing verb's synsemantics.

The exponents of correlations between the Ukrainian and English synsemantic verbal systems in two-component semantic unities are rather revealing, first of all, in terms of the manifestation of their quantitative representations in the comparable languages. They are nouns, pronouns and adverbs that exponent synsemantics.

It is essential to consider that the synsemantic verbs (both Ukrainian and English) have obligatory compliments expressed by non-prepositional noun clusters: Ukr. *виготовляти продукцію, розробляти план; розв'язувати проблему, пекти хліб, готувати сніданок, відстоювати незалежність;* Eng. *to make machines, to love a woman, to learn English, to lead a demonstration, to know literature, to kill one's enemy, to interrupt the speaker, to improve the situation, to hold a spoon* та под.

Two-component semantical units have a fixed position for the exponents of verbal synsemantics. The post-verb position is believed to be typical for the contrasted languages: Ukr. *Безсмертні всі: той* ***виростив дитину****, той* ***пісню написав****, хоч і єдину. А той, хто не зумів цього зробить, біля дороги* ***посадив калину*** (Д. Павличко); *Клубок куль* ***пройшов крізь*** *саме* ***серце*** *і* ***розколов його*** (М. Стельмах); Eng. *People* ***played polo*** (F. Fitzgerald); *A wise man* ***changes*** *his* ***mind****, a fool never will* (Prov.); *It* ***contained*** *clear* ***guidelines*** (R. Black).

***4.3.5. Morphological Classes of the Exponents of Syntagmatic Correlation.***

The criterion "morphological status of the exponent" is relevant to the non-predicative exponents. One-position exponents can be expressed by nouns, pronouns (with or without prepositions), adverbs, infinitives and Gerunds (in English): Ukr. ***Світ*** *осяває сонце, а* ***людину*** *знання* (Н. тв.); *Сонце вже торкалось* ***землі*** *і висівало на степ червоний* ***пилок*** (Г. Тютюнник); Eng. *I heard* ***a noise*** *behind me* (J. Swift); *I admired the man's* ***ingenuity*** (R. Stevenson); *Then we lit the* ***candles*** (M. Twain).

The exponents of correlation of synsemantics expressed by three-component structures are the following:

a) two nouns (without prepositions): Ukr. *Студентського* ***боргу*** *не встиг він повернути* ***Стусу*** (М. Каменюк); *І він розповів* ***юнакові притчу*** *про птицю* (В. Шевчук); Eng.. *He gave* ***the child*** *only one* ***apple*** (M. Binchy)*; I gave* ***David a book***; b) a noun without preposition + a noun with preposition: Ukr. *От поїхала вона на розгледини, випросила* ***у сусіда кобилу й санки*** (Г. Тютюнник); Eng. *I released this* ***man from the tomb*** (M. Hodkinson); c) a noun without preposition + a pronoun without preposition: Ukr. ***Чим*** *я маю привернути* ***серце*** *милої, – не знаю* (Леся Українка); Eng.. *In my younger my father gave* ***me*** *some* ***advice*** (F. Fitzgerald); d) a noun without preposition + a pronoun with preposition*: Ukr.Він щосили кинув* ***каменюку в них*** *та й тікати* (О. Донченко); Eng. *I threw* ***the ball to him*** *and he caught it; I applied my* ***face to him*** (J. Swift); e) a noun with preposition + a pronoun without preposition: Ukr. *Подружжя і гадки не мало запрошувати* ***їх до хати*** (В. Малик); Eng. *I will add* ***it to the account*** *when you leave,' he murmured* (S. Storm); f) two pronouns without prepositions: Ukr. *Передайте* ***це їм*** *та й тікайте* (В. Шевчук); Eng. *I've heard the Reason, and I'll tell* ***it you*** (R. Greene); g) a pronoun without preposition + a pronoun with preposition: Ukr. *Тоді господь відвів* ***мене***

***від нього*** (І. Нечуй-Левицький); Eng. *He endeared* ***himself to everyone****; He kept* ***me with him*** *all the time* (M. Twain); j) a noun without preposition + an infinitive: Ukr. *На другий день батько просив* ***сина вивезти*** *косарям обід* (І. Нечуй-Левицький); Eng. *Dare I ask* ***the man to explain*** (Ch. Dickens).

***5. Conclusions.***

To sum up, the system of differential criteria presents the basis for typology of forman exponents of verb's syntagmatics. This typology seems relevant for revealing correlation in the Ukrainina and English verb's systems. It also helps to reveal full, partial or missed correlation in the subcategories or microcategories and vthe whole verbal systems.

It is not without a reason that exponents of syntagmantic correlation of the whole verb's systems are rather generalized, primarily due to the originality and uniqueness of the semantic content of each constituent of a given microcategory. However, our contrastive study presents one of the way we can use to reveal syntagmatic correlation in the contrasted verbs systems. The framewokrk of our study allows to identify the most typical isomorhic and allomorphic tendencies concerning the formal explication of synsemantics and get particular general conclusions. In particular, such microcategories as "action-location (object)", "action-speech", "action-mental activity" are the most isomorphic in the implementation of synsemantics, formalized by the exponents of syntagmatic correation.

Thus, we stick to the opinion that the syntagmatic correlation of the verb's system is revealed by help of the specific tool that is known as "the exponent of syntagmatic correlation". This exponent can be identified and classified according to the specific explicit (formal) characteristics. The most promising parameters for creating the typology of exponent of syntagmatic correlation are: 1) non-predicative / predicative / semi-predictive constructive elements as compensators of verbal synsemantics; 2) synthetism / analytism; 3) uncomplicated / complicated structure; 4) the number of expressed strong verb's positions; 5) morphological status. Each of them is believed to be specific for its realization and can provide a scientifically grounds for verbs classification from the syntagmatic cross-linguistic perspective.

***R e f e r e n c e s***

Aarts, B., Meyer, C. (2006). *The verb in contemporary English: theory and description*. Cambridge University Press. 328–329.

Abraham, W. (1989). Language universals. *Universals of language*. eds M. Kefer, J. V. D. Auwera. Brussels: Editions de l'Université de Bruxelles. 9–25.

Andersh, Y. F. (1987). *Typolohiia prostykh diieslivnykh rechen u cheskii movi v zistavlenni z ukrainskoiu* [The typology of simple verb sentences in the Czech language in comparison with the Ukrainian language]. K. : Nauk. dumka. 192.

Apresyan, Yu. D. (1995). Leksicheskaya semantika. Sinonimicheskie sredstva yazyka [Lexical semantics. Synonyms of the language]. *Izbrannye trudy: v 2 t.* M. : Yazyki russkoj kultury: Vostochnaya literatura. 1. 472.

Apresyan, Yu. D. (2004). O semanticheskoj nepustote i motivirovanosti glagolnyh leksicheskih funkcij [On semantic non-emptiness and motivation of verbal lexical functions]. *Voprosy yazykoznaniya*. 4. 43–44.

Arutyunova, N. D. (1980). K probleme funkcionalnyh tipov leksicheskogo znacheniya [On the problem of functional types of lexical significance]. *Aspekty semanticheskih issledovanij*. M. : Nauka. 156–249.

Arutyunova, N. D. (1999). Predlozhenie i proizvodnye ot nego znacheniya [The sentence and its derivatives]. *Yazyk i mir cheloveka*. M. 403–452.

Bowers, J. (2010). *Arguments as relations (linguistic Inquiry Monograhs)*. Cambridge: MIT press. 239 p. https://doi.org/10.1017/S0022226711000417

Croft, W. (1991). *Syntactic categories and grammatical relations*. Chicago & Lindon: University of Chicago Press. 331 p. URL: https://doi.org/10.1017/S0022226700015164

Croft, W. (1991). *Syntactic categories and grammatical relations*. Chicago & Lindon: University of Chicago Press. 331. https://doi.org/10.1017/S0022226700015164

Cruzo, O., Hansen-Schirra, S. (2016). *Crossroads between contrastive linguistics, translation studies and machine translation: TC3-II*. Berlin: Language Science Press.

Defrancq, B. (2015). *Contrasting contrastive approaches. Language in contrast*. 15. 1–3. https://doi: 10.1075/lic.15.1.01def

Denysova, S. P. (2006). Leksychna syntahmatyka: osnovni poniattia ta terminy [Lexical syntagmatics: basic concepts and terms]. *Mova. Liudyna. Svit*. K. : Vydavn. tsentr KNLU. 87–96.

Fathy, K. M. (2018). Contrastive Analysis, Error Analysis, Markedness Theory, Universal Grammar and Monitor Theory and their Contributions to Second Language Learning. *International Journal of Linguistics*. 10.1. 12–41. https://doi.org/10.5296/ijl.v10i1.12479

Filipovic, L. (2017). Applying typological insights in professional practice. *Language in contrast*. 1. 255–278. https://doi.org/10.1075/lic.17.2.05fil

Fillmore, C. J. (1968). The Case for Case. *Universals in Linguistic Theory*. New York: Holt, Rinehart. 1–88.

Fillmore, C. J., Kay P. (1992). *Construction grammar course book*. Berkeley: University of California. 113.

Gak, V. G. (1972). K probleme semanticheskoj sintagmatiki [On the problem of semantic syntagmatics]. *Problemy strukturnoj lingvistiki*. M. : Nauka. 367–395.

Goddard, C. (2001). Lexico-semantic universals: a critical overview. *Linguistic typology*. 5.1. 1–66.

Hartmann R. R. K. (1991). Contrastive linguistics and bilingual lexicography. *Woerterbuecher Dictionnaires. International Encyclopedia of Lexicography*. ed. F. J. Hausmann. De Gruyter. III. 2854–2859.

Ivanytska, N. B. (2006). Absoliutyvno-reliatyvnyi potentsial ukrainskykh diiesliv u proektsii na strukturu rechennia [Absolutely-Relative Potential of Ukrainian Verbs in Projection on the Structure of a Script]. *Ucrainica II. Současna Ukrajinistika. Problěmy jazyka, literatury a kultury: Sborník článků. 3 Olomouckě symposium ukrajinistů. 1čăst.* Olomouc: Univerzita Palackěho v Olomouci. 269–274.

Ivanytska, N. B. (2011). *Diieslivni systemy ukrainskoi ta anhliiskoi mov: paradyhmatyka i syntahmatyka: monohrafiia* [Verbal systems of Ukrainian and English languages: paradigm and syntagmatics: monograph]. Vinnytsia: SPD Hlavatska. 636.

Ivanytska, N. L. (1986). *Dvoskladne rechennia v ukrainskii movi* [Two-sentence sentences in the Ukrainian language]. K. : Vyshcha shk. 167.

Kacnelson, S. D. (2001). *Kategorii yazyka i myshleniya. Iz nauchnogo naslediya* [Category of language and thinking. From the scientific heritage]. M. : Yazyki slavyanskoj kultury. 864.

Kiselyova, S. V. (2000). *Predikaty partitivnoj semantiki v sovremennom anglijskom yazyke* [Predicates of partitive semantics in modern English]: dis. … kand. filol. nauk. SPb. 193.

Kocherhan, M. P. (1984). Leksychna spoluchuvanist i semna struktura slova [Lexical connectivity and semantic structure of the word]. *Movoznavstvo*. 1. 25–32.

Koning, E. (2012). Contrastive linguistics and language comparison. *Language in contrast*. 2. 3–26. https://doi.org/10.1075/lic.12.1.02kon

Korolyova, A. V. (2014). Kohnityvna linhvokomparatyvistyka: vid rekonstruktsii pramovnykh form do rekonstruktsii struktur svidomosti [Cognitive Linguistic Comparative Studies: From the Reconstruction of Formal Forms to the Reconstruction of the Structures of Consciousnes]. *Visnyk KNLU. Seriia Filolohiia*. 17. 2. 94–101.

Kubryakova, Ye. S. (2004). *Yazyk i znanie: na puti polucheniya znanij o yazyke: Chasti rechi s kognitivnoj tochki zreniya. Rol yazyka v poznanii mira* [Language and knowledge: on the way of getting knowledge of the language: Parts of speech from the cognitive point of view. The role of language in the knowledge of the world]. M. : Yazyki slavyanskoj kultury. 560.

Kuznecova, E. V. (1975). Chasti rechi i leksiko-semanticheskie gruppy slov [Parts of speech and lexico-semantic groups of words]. *Voprosy yazykoznaniya*. 5. 78–86.

Leech, G. (2004). *Meaning and the English Verb*. Pearson Education. 141.

Leuta, O. I. (2008). *Struktura i semantyka diieslivnykh rechen v ukrainskii literaturnii movi* [Structure and semantics of verbal sentences in the Ukrainian literary language]. K. : Taki spravy. 208.

Melchuk, I. A. (1974). *Opyt lingvisticheskih modelej "Smysl↔Tekst"* [Experience of linguistic models "Sense↔Text"]. M. : Nauka. 260.

Mukhalad, M. (2017). The significance of the use of lexical relations in English language. *International Journal for Advanced Researches*. 5(4). 944–947. http://dx.doi.org/10.21474/IJAR01/3900

*Oxford English Dictionary Online*. ed J. Simpson. http://dictionary.oed.com

Palmer, F. R. (1994). *Grammatical roles and relations*. Cambridge: Cambridge University Press. https://doi.org/10.1017/S00222267000163

Perebyinis, V. I. (2000). Variatyvnist slovozminnykh form anhliiskoho diieslova [The variability of swap forms of the English verb]. *Visnyk Kyivskoho linhvistychnoho universytetu*. 1. 3. 13–19.

Shirokova, A. V. (2000). *Sopostavitelnaya tipologiya raznostrukturnyh yazykov: Fonetika, morfologiya* [Comparative typology of different languages: Phonetics, morphology]. M. : Dobrosvet. 196.

Slyusareva, N. A. (1986). *Problemy funkcionalnoj morfologii sovremennogo anglijskogo yazyka* [Problems of functional morphology of modern English]. M. : Nauka. 212.

Stepanova, G. V. (1978). *Cemantika mnogoznachnogo slova* [The semantics of a polysemantic word]. Kalinngrad. 50.

Syleymanova, K. (2015). Text Forming Potentials of Verbs. *International Journal of English Linguistics*. 5. 153–155. https://doi.org/10.5539/ijel.v5n5

*Teoriya perevoda i sopostavitelnyj analiz yazykov* [Translation theory and comparative analysis of languages] (1985). pod. red. E. M. Mednikovoj. M. : Izd-vo MGU. 144.

Tesniere, L. (1953). *Esquisse d'une syntaxe structural* [Sketch of a structural syntax]. Paris. 254.

*The Verb in Contemporary English: Theory and Description* (2006). eds B. Aarts, Ch. F. Meyer. Cambridge: Cambridge University Press. 328.

Ufimtceva, A. A. (2002). *Leksicheskoe znachenie: Principy smiologicheskogo opisaniya leksiki* [Lexical meaning: Principles of theological description of vocabulary]. pod red. Yu. S. Stepanova. 2-e izd., stereot. M. : Editorial URSS. 240.

Vykhovanets, I. R. (1992). *Narysy z funktsionalnoho syntaksysu ukrainskoi movy* [Essays on the functional syntax of the Ukrainian language]. K. : Nauk. dumka. 224.

Zahnitko, A. P. (2011). *Teoretychna hramatyka suchasnoi ukrainskoi movy. Morfolohiia. Syntaksys* [Theoretical grammar of modern Ukrainian language]. Donetsk: TOV "VKF "BAO". 992.

**Бібліографічний опис:**

Іваницька, Н. Б., Іваницька, Н. Л. (2018). Синтагматичні виміри українських та англійських дієслів: типологія експлікаторів корелятивності. *Науковий часопис Національного педагогічного університету імені М. П. Драгоманова. Серія 9 Сучасні тенденції розвитку мов*. К. Вип. 17. С. 43–56. DOI: https://doi.org/10.31392/NPU-nc.series9.2018.17.04

***Анотація***

*У статті українські та англійські дієслова розглядаються в аспекті їхньої синтагматики. Синтагматика дієслів аналізується з міжмовної точки зору. Автори пропонують двобічне контрастивне вивчення дієслів, яке базується на основних досягненнях сучасної зіставної лінгвістики. Проаналізовано ключові фактори, що визначають сполучуваність слова (дієслова зокрема). Стаття містить короткий огляд теорій, в яких розмежовано синтаксичну, семантичну та лексичну синтагматику. Доведено, що сучасній лінгвістиці притаманне синкретичне бачення синтагматичних відношень, особливо в межах дієслівних класів. Указано на доцільності та необхідності поєднання семантичного й граматичного аспектів сполучуваності. Акцентовано на релевантності застосування поняття валентності для міжмовного аналізу синтагматичних параметрів зіставлюваних дієслівних систем. З'ясовано, що сполучувальна потенція дієслова як вияв семантичних та граматичних властивостей слова визначає специфічність та закономірність синтагматичних відношень, що виникають у процесі функціонування дієслівних систем як української, так і англійської мов. Подано авторську типологію формальних експлікаторів корелятивності, яку можна успішно застосовувати для виявлення ізоморфних і аломорфних характеристик дієслів. Наведено докази того, що експлікатор корелятивності є ефективним інструментом для створення синтагматичної парадигми дієслів в аспекті зіставлення. Типологія експлікаторів синтагматичної корелятивності представлена невербалізованими (нульовими) і вербалізованими (непредикативними / предикативними / напівпредикативними, синтетичними / аналітичними, простими / складними, однопозиційними / багатопозиційними) одиницями, які утворюють відповідний парадигматичний ряд у зіставлюваних мовах.*

***Ключові слова:*** *експлікатор синтагматичної корелятивності, дієслівні системи української та англійської мов, сполучуваність слів, синтагматика, типологія експлікаторів синтагматичної корелятивності.*

**DOI:** https://doi.org/10.31392/NPU-nc.series9.2018.17.05
**UDC:** 81'384

**Ganna V. Izyumtseva**
National Pedagogical Dragomanov University, Kyiv, Ukraine

# THEOCONCEPT STRUCTURE RECONSTRUCTION AS MULTI-DIMENSIONAL MATRIX FORMATION

***Bibliographic Description:***
Izyumtseva, G. V. (2018). Theoconcept Structure Reconstruction as Multi-Dimensional Matrix Formation. *Scientific Journal of National Pedagogical Dragomanov University. Series 9. Current Trends in Language Development*. K. 17. 57–67. DOI: https://doi.org/10.31392/NPU-nc.series9.2018.17.05

***Abstract***
*The article addresses the problem of structure reconstruction of the theoconcept as a sensecreating basic component of religious picture of the world. The theoconcept is interpreted as a multi-dimensional formation which embodies experience of a man (people), both physical and spiritual; and is at the same time typified by a historically conditioned worldview constituent. The rational for employing the diachronic-synchronic approach to account for the concept structure is provided. Major emphasis is placed on the study of theoconcepts against concepts of other types and their modes, particularly, as abstract ontological-intuitive mental entities.*

*Reconstruction of seven levels of the theoconcept REPENTANCE structure is conducted; it bears evidence that this formation is of cognitive-matrix format. It is found that the kernel content of the theoconcept REPENTANCE has been developed on the base of a meaning "turn", which, according to the Biblical context of conceptualization, reconstructs the essence of repentance (level one). The kernel-centered (circumnuclear) area is formed by such meanings, as "confession", "sacrament", "penance", "reconciliation", "testament", "reunion", with basics of Orthodox doctrine as cognitive contexts (level two). Ethnic coloring of the concept meaning is revealed through such spiritual sense of the theoconcept REPENTANCE, as "congregational confession" (level three). The image of repentance as "the second baptism" emerges in the context of Christian symbolic meanings (level four). The shade of meaning "to turn away" ("military command") has been developed in a process of its folk-etymological conceptualization, and constitutes the periphery of the concept (level fife). In a context of monastic movement in Ukrainian lands, and life of monks (level six) shades of meanings "atonement", "asceticism", "hermitage", "anchorite" are being actualized. The last level (distant area) of senses embraces the individual-specific shades of senses, personal shades of senses of the concept under consideration, present in idiolects of the faithful.*

*Finally, the results indicate that reconstructed sense levels are the cognitive contexts to interpret the kernel meaning of the theoconcept REPENTANCE. They bring into focus (highlight) its other senses, which interplay and produce its conceptual multi-aspectedness and multi-dimensionality that is nothing but matrix.*

***Keywords:*** *theolinguistics, theoconcept REPENTANCE, cognitive matrix, field model of a theoconcept.*

***1. Introduction.***

In the context of ongoing shift toward ontological and epistemological perspective within contemporary linguistics, as V. I. Postovalova points out, scholars are returning to the world of being by selecting to study such units that are capable of providing utmost insights into the spiritual world of a man. The choice typically turns next to the concepts as such and religious concepts in particular; the latter have been studied lately within a framework of theoconceptology (Postovalova 2014a: 128). V. A. Stepanenko accurately and fairly expresses the value of such investigation by saying that "if linguistics ignores the spiritual knowledge, it, as any other science about a man, risks remaining shallow" (Stepanenko 2011: 13).

In a present-day linguistics, even though some linguoconceptoplogical studies that tend to so-called "conceptomania" (A. M. Prykhodko) begin to arouse criticism, promising prospects within this sphere are being offered by theolinguistics (O. O. Cherkhava, O. Hadomskyi, D. Krystal, N. Mechkovska, Y.-P. van Noppen, and others) – a new integrated discipline that crosses disciplinary boundaries and aims at examining the interaction between language and religion (Gadomskiy 2004: 166). In Y. P. Senokosov's opinion, "language is our only reality that comprises "physics" and "meta-physics"; thus, it is capable of providing an access to the "Absolute"; and therefore, an access to new knowledge" (cited in: Mamardashvili 1997: 301).

According to I. V. Buhaieva, theolinguistic research centers around religious communication and religious picture of the world (Bugayeva 2014: 294), which is constituted by entirety of religious concepts (theoconcepts) and demonstrates its significance for the spiritual life of an individual (Postovalova 2014a: 129) by reflecting in language the religious worldview (Bugayeva 2014: 294–295). In reconstruction of the religious picture modelling mechanism based on interrelation of religious concepts rests that promising aspect of linguoconceptological development that will make it possible to reveal in what way such research is actually essential; and above all, in due course, it will provide answer to the questions how a concept acquires its mental characteristics, and where the origins of its mentalization lie.

***2. Aim.***

**The aim** of the article is to reconstruct the structure of a theoconcept as a sensecreating basic element of religious picture of the world.

***3. Processes of Acquiring Consciousness Mental Structure Status by a Concept.***

To rationalize the theoconcept as one of the concept types, we ought to provide in a nutshell the linguoconceptological provisions which will ensure the optimal definition of this structure of human consciousness.

Conceived within the medieval mind (P. Abeliard (Neretina 2010: 306)) introduced to linguistics by scholar S. A. Askoldov, with the advent of cognitive linguistics the term "concept" has eventually turned into a stem term (Kratkiy slovar 1996: 90−93; Stepanov 1997: 40−76).

Ye. S. Kubryakova considers the concept as a fundamental unit of human consciousness; a constituent of "collective subconscious"; the"operational meaningful unit of memory; the unit of our consciousness mental and psychic resources, which reflects the content of experience and knowledge in a form of some "quanta" of knowledge; is partially verbalized by language means, embracing along with it a portion of information in a non-verbal form" (Kratkiy slovar 1996: 90). Yu. V. Stepanov holds the same opinion speaking about a concept as the "energetic bunch of culture, mental picture of something that not always can be verbalized; however, can be seen, heard, sensed, felt, recognized, perceived, and recalled […]" (Stepanov 1997: 40, 68).

The development of concepts, as M. M. Boldyrev points out in his research, occurs gradually during a person's lifespan. In a course of activities through the acts of cognition (perceptual and rational), an individual creates general notions, which later are integrated in a system of knowledge about the world. Such system is constituted by concepts of different level of complexity and degree of abstractedness; varying in means of formation (Boldyrev 2001: 23). Resting on such M. M. Boldyrev's observation as well as the observation of other scholars, A. Yu. Sternin's in particular, in a process of acquisition by a concept of its status the following factors are involved: 1) perceptual experience; 2) substantive work; 3) cognitive toying with already existing concepts; 4) speech acts; 5) learning new meanings of lingual units (learning new lingual units fixed by dictionaries, reference books etc.) (Popova, Sternin 2001, 2007; Boldyrev 2001).

At the same time, the type of data collected by psychologist N. I. Zhinkin in an area of speech production has thrown more light on the process of the concept formation, and significantly enriched the comprehension of the concept essence (Zhinkin 1998). N. I. Zhinkin came to conclusion that thinking process is realized through some subjective, not akin to the verbal one, code units (resulting from internalization of objective external actions). It is the "code of subject and scheme", which is also called the Universal Subject-Scheme Code (USC). The USC are neurophysiologic entities, perception images, schemes, representations, emotional imprints of reality which codify elements of knowledge (concepts) integrating and differentiating them at the level of consciousness according to different principles. The USC is universal (all people have it), substantive (its signs signify predominantly substantive images), and at the same time subjective (unique for each speaker, as it is created as a reflection of his one of a kind, individual, sensual life experience) (Sternin 2015: 15).

Thus, in a process of evolution (acquiring its status), concepts start as sensual images. The USC entities codify them at the level of consciousness. The USC that is characterized by individual subject-image nature, constitutes the brightest visual stable kernel part of a concept, which subsequently gets wrapped up in layers of knowledge, namely: *empirical* (attained through experience), *encyclopaedic* (the source of which is trust in authority) and *doxastic* (with thoughts, judgments, and **beliefs** as the source). In the opinion of L. O. Cherneiko, the former is naive knowledge; it constitutes the content of folk consciousness of an individual (Cherneyko 2010).

***4. Evolution of Concept and its Structure Modelling.***

The delineated above approach to concept evolution brings us close to the issue of formation of a concept structure as a mental process described by researchers according to the kernel-periphery principle; here with, the core (kernel) was considered to be the most concrete sensual-visual image of a concept, its USC – a prototypical formation that can be of nationwide, collective as well as of individual character; while basic layers that are varying according to degree of abstractedness and developing sequence of layers – core-centered (circumnuclear); the developing sequence of layers depends on subjective and individual conditions of a concept formation; at the same time the periphery of a concept is understood as its interpretative field, which incorporates estimative characteristic of a concept core as viewed through the lens of national, collective and individual consciousness (Popova, Sternin 2001).

The field structure (that is such structure) of a concept is favoured by majority of scholars (Yu. M. Karasyk, M. V. Nikitin, A. M. Prykhodko et al.), albeit the number and content of layers constituting the concept structure may vary (cited in: Selivanova 2008: 417) Among the alternative models of a concept structure, the diffusive model of a concept

structure is put forward. Unlike the field structure, it is characterized by diffusive character, that is, the conceptual futures are of "overflowing" character (Popova, Sternin 2007: 302).

In our opinion, these models fail to account for origins of a concept kernel organization. However, convincing account is put forward by A. V. Korolyova who has thoroughly analysed available approaches to a concept structure, and has identified the genetic foundation of a concept, that is, in the opinion of the scholar, "etymology of a concept name as well as its representatives, their implicit form that allows a researcher to trace how the concept meaning has changed over time, and consequently, to establish semantic regularities revealing themselves in a process of categorization and conceptualization of a segment of reality named by this particular concept" (Korolyova 2011: 57). On this premise, the concept structure ought to be viewed within the framework of the diachronic-synchronic approach to analysis. The structural elements ought to be established "via correlation between original (primary) information of its names (historical and etymological) and such that is represented within a concept at the present stage (actual information)" (Korolyova 2011: 54). In line with the approach elaborated by A. V. Korolyova is the position of L. O. Cherneiko that is accurately expressed in the thought that "the name of a concept embraces the lingual transformation of all kinds of knowledge about the phenomenon it stands for" (Cherneyko 2010: 203−206).

***5. Interrelation of a Concept Structure with Two Types of Concepts: Abstract and Concrete.***

It becomes evident that the notion of a concept structure and the concept type identification are closely connected, and should be discussed together. Taking into account the fact that theoconcepts belong to the domain of sacred, to differentiate between concrete and abstract concepts is essential. Unlike the abstract concepts, the concrete concepts, due to undergirding sensual foundation, are easily described and illustrated. Moreover, abstract concepts refer to realities which often are not easy to imagine or explain. Researchers state that abstract concepts "defuse" and are "not completely unveiled" (S. O. Askoldov-Aleksieiev). In O. P. Babushkin's opinion, the distinctiveness of abstract concepts consists in their "individuality, modal-evaluative character; they are determined by moral standards and traditions of socium" (Babushkin 1977: 33). They come to the fore as entities "metaphysical" (S. H. Vorkachev), "ideal" (L. O. Cherneyko), requiring deeper explanation, and better "anchorage in sign" (Nikitin 2003) (cited in: Belyutin 2005: 21).

Among other concept modes, researcher M. V. Nikitin lists, in the first place, the mode of conceptual systematization of the world and its entities (Nikitin 2003: 54), inasmuch as their relations and inter-relations with other concepts underlie classes and categories reflecting deep structure of the world.

According to J. Bruner, the category is a set of rules employed to classify the objects (Bruner 1977). G. Lakoff views categories as forms and stable organizing principles of thinking that reproduce features and relations of being and cognizing in the most concentrated way. "To change the very concept of a category is to change not only our concept of the mind, but also our understanding of the world" (Lakoff 1990: 9). M. V. Nikitin points out that ontological objects reveal unlimited number of attributes; therefore, such objects can be classified according to different attributes a number of times. However, as the researcher continues, the attributes, used as a basis for categorization, vary in the degree of informative value; that is, they allow forecasting more or less implicitly connected features. This explains why classifications are, albeit not rigidly, divided into primary taxonomic and secondary non-taxonomic classifications. Prime taxonomic classification is characterized by maximal informativeness and forecasting capability, because it reflects the structure of the world to the maximum, ranging the properties in the

world entities at different levels of generalization (Nikitin 2003: 684), and, as empirical anthropological studying prove, it is genetically predetermined (Artran 1998: 203; Lopez, Artran, Coley & Medin 1997).

In her empirical studies, Eleonor Rosch has proved the existence of three levels of categorization, namely: the superordinate (the most abstract upper level); the basic and subordinate (more concrete lower level) levels (Croft & Cruse 2004: 82–87; Rosch 1978: 28–35). The superordinate level which is, as we have already mentioned, characterized by high abstractedness and manifest high degree of generality, reveals itself in such categories, as, for instance, "natural objects", "persons", "artefacts" etc. (Croft & Cruse 2004: 85).

Let us dwell on the intuitive ontological categories that are similar to main taxonomic categories but not identical to them. The notion "intuitive ontology" was introduced by P. Boyer, Professor of Washington University in St. Louis (the USA) whose works became revolutionary in the domain of cognitive religion. In his investigation, P. Boyer rests on the findings in an area of natural categorization (B. Berlin, F. Keil, Yu. Khann, E. Rosh). The model of "ontological knowledge" presented in a form of "ontological tree" (F. Keil) consisting of natural classes reflects how people intuitively categorize the world around (Keil 1979). It should be added that within cognitive science intuitive is understood in sense of naïve, folk, "that it is not a product of deliberate reflection on what the world is like" (Barrett 2008: 310).

Unlike main taxonomic categories, the intuitive ontological categories are domains of intuitive knowledge that exist in a form of tacit knowledge which guides people in a process of perception and conceptualization of reality (Fodor 1968; Rosch, 1973; Spelke, 1991). The intuitive ontological categories evolve throughout life, and all together constitute "intuitive ontology" of a person (Boyer, Barrett 2015). The intuitive ontological categories reveal themselves through so-called theories about the world: "naïve\folk physics" (Lipman & Bogen 1923) (intuitive knowledge enabling people to act adequately in physical world); "naïve/folk biology" (connected with a process of conceptualization and classification of objects of organic world) (Artran 1999), "naïve\folk psychology" ("theory of mind") – knowledge that enable people to represent other people's psychic states, attribute motivations and intentions to oneself, and to others, and to interpret own actions and behaviour of others in terms of desires, convictions, expectations etc. (Churchland, 1989; Whiten 1991).

Thus, the development of categories is connected with origin of concepts, their existence and grouping in stable cognitive formations, one of which is *theoconcept, or religious concept.* Review of modes of conceptual systematization of the world and its entities has revealed the existence of main ontological (taxonomic) categories and intuitive ontological categories. As P. Boyer points out, albeit the criteria of intuitive ontology remain fuzzy, as the research outcome proves, they are integrated and present within cognition of an individual (Boyer 1996).

***6. The Structure of a Theoconcept against the Structure of other Abstract Concepts***.

The theoconcept as an abstract ontological-intuitive mental entity requires determination of its distinctive features. In her justifications of peculiarities of religious concepts, V. I. Postovalova rests on general for linguistics definition of concepts, namely that concepts are the "minimal quantum of knowledge incorporating in a condensed form the most significant to humankind ideas about being in general and the being of a man in particular" (Postovalova 2014a: 130). The scholar points out that within the religious picture of the world "in the light of theoanthropologic prospect, religious concepts present themselves as spiritual (ontological) reality" (Postovalova 2014a: 132).

In addition, the valid, in this context, seems a thought that religious concepts do not constitute an autonomous type; and thus, can be studied against other concepts (Boyer 2001);

however, on the understanding that these entities (religious concepts) most certainly fix peculiar human experience and emotions (Baumard & Boyer 2013); are characterized by special content, and stability: better resist time and other concepts (Boyer 2000: 196); are attention grabbing, easily remembered and recollected, that is why are more likely to be transmitted and spread (Barrett 2008; Boyer & Ramble, 2001; Johnson, Kelly & Bishop 2010; Upal, Owsianiecki, Slone 2007; and others).

In the light of the aforesaid, it becomes clear that a theoconcept belongs to the sacred sphere of religious picture of the world; moreover, studying its structure as such is returning of conceptology to its roots: it in its time originated in a form of peculiar intellectual and spiritual endeavour to conceive and comment the texts of the Holy Scriptures. (Implementation of P. Abeliard's principle "perceive, to believe"). "Conceiving own concept, own opinion, a medieval person became an author of his own Word or Book, expressed through commentaries" (Neretina 1994: 142).

"Endeavours of theoconcetology focus at reconstruction of the world-view aspect of the religious concepts content, complementing and correcting the structure of a concept, discovered using the methods for analysis of cultural semantics units. V. I. Postovalova underlines that the spiritual and world-view stage in interpretation of religious concepts marks the limit of their kataphatic cognizing; at the same time it brings to light apophatic dimension that is beyond human understanding" (Postovalova 2014a).

The idea of spiritual essence of concepts are running through the works of the first conceptologist – P. Abeliard, who in his time defined a concept as "a spiritual act realized via speech" (Neretina 2010: 306). V. A. Stepanenko in her analysis of the concept "Душа. Seele. Soul", justifying its ontological aspect, among other ontological conceptual features singles out such feature as "God-breathedness" (Stepanenko 2006: 33–34). It worth noting that "God-breathedness" is a Biblical term: "All Scripture is God-breathed" (2 Tymothy 3: 15–17). It is a principal concept undergirding the Christian doctrine on divine origin of the Bible. According to V. A. Stepanenko, it is the concept feature "God-breathedness" that embraces the mystical knowledge essential for ontological understanding of a given concept. However, as the researcher explains, presence of such knowledge itself is not a guaranty of its accessibility as well as comprehension of a concept, because from ontological standpoint, exhaustive comprehension of a concept belongs to Proper Name / God / Absolute (Stepanenko 2006: 34).

Generalizing from ideas and research outcome of such scholars, as F. Bethen, F. Bystrov, S. M. Zarin, P. O. Florenskyi, V. I. Postovalova claims that the only way to unveil the spiritual essence of spiritual concepts if from inside of a particular denominational world-view, from inside of "spiritual cosmos" of a given belief system. Thus, for Christians, it is, according to P. O. Florenskyi, the idea of salvation in terms of soteriological category (Florenskiy 1999: 468). In line with this we will add that salvation is a result of conversion, the "gift of God" (Ephesians 2, 8–9). Saint Augustine had experienced and described it as an act of almighty power of grace. As an act of enlightment of the heart and mind; however, at the same time, the act of power that it was hard to resist (Blazhennyy Avgustin 1996). Saint Augustine's life, a number of examples from the Holy Scriptures (Moses (The Pentateuch), Paul (Saul) and his conversion on his way to Damascus (Acts 9:4,5); conversion and baptizing of eunuch (Acts 8:26–39) and many others serve as an example of above stated.

Thus, exhausting comprehension of the spiritual constituent of a theoconcept structure – its kernel and other strata – layers seems to be a vocation of chosen ones, since it demands not mere detailed scientific analysis but also sanctification (Cherkhava 2017). Although, sometimes even spiritual experience fails to disclose what must be concealed from a man. The Athon dispute over the power of God's name (whether the name of God is God Himself

or the name of God is a sacred verbal symbol) convincingly demonstrates this thought (Postovalova 2014b). The Athon dispute problem remains unsolved, and actually cannot be solved. A man is not capable of perceive and comprehend the world in its entirety.

V. I. Postovalova puts forward such structure of a theoconcept (religious concept) as a multi-dimensional formation, according to O. O. Cherkhava, of a matrix-like format, that has seven levels or spheres of conceptual content: 1) invariant; 2) basic; 3) ethnic variants of confessional spiritual senses; 4) shades of senses filtered through a prism of symbols inherent in a particular spiritual culture (nationwide or confessional); 5) shades of senses that are entailed by reflexion on a lingual form of a concept and folk-etymological sense; 6) various shades of a concept sense that are entailed by interpretation and living through (experiencing) the concept by different communities at various times (general church life, monasterial life, etc.); 7) individual-specific senses, personal shades of senses incorporated in idiolects of separate representatives of religious community (Postovalova 2014a: 139–143).

***7. The Theoconcept REPENTANCE Structure Reconstruction***.

Let us reconstruct the delineated above levels within the structure of a concept REPENTANCE (Каяття) – the one of paramount importance for Orthodox-Christian world view.

According to the first – invariant level, this embraces supranational, supracultural, confessional kernel content that is common for joint consciousness as such. Within Christianity, concept REPENTANCE is interpreted in a general way as "turn" (Mathew 18:3; Jeremiah 18:11): a man is expected to turn away from sin and turn to God, confess sin and sincerely seek forgiveness.

The second and that is a basic level of this concept meaning reflects the world-view senses, which are formed within the framework of particular denomination division. At this level the kernel meanings are enriched by senses like "confession", "sacrament", "penance", "reconciliation", "testament", the "second baptism", "reunion". The Orthodox Church teaches that repentance is considered to be one of seven Sacraments of Christian Church – the Sacrament of Reconciliation. Since any man by sinning rebels against God, and consequently, his sin separates him from God and Church (Luke 11:23), he needs reconciliation. The only way to be reconciled with God and to return to Him and the bosom of His Church is through true repentance. That is why the pastor's absolvent words in the Sacrament of Reconciliation service are preceded by a prayer about reconciliation and reunion of the one, who is partaking in the Sacrament, with the Holy Church through Jesus Christ the Lord. Repentance is also the testament between a man and God – sincere promise of a sinner to correct the ways of life (Ilarion (Alfeyev), iyerom. 1996: 162, 163).

The third content level of the concept under consideration is represented by spiritual senses inherent in ethnical variants of denominational subdivisions. Unlike the Greek Church, for instance, the Ukrainian Orthodox Church has a practice (in time of need) of "mutual confession". It may take place when the church congregation is too big for a priest to pronounce the forgiveness over each member of congregation individually. In such cases the priest reads audibly the list of faults to confess, and congregation (each person individually examining the state of his heart) responses "Repenting", "I have sinned", or keeps silence (Ilarion (Alfeyev), iyerom. 1996: 164).

The fourth content level of the concept reveals the symbolic shades of senses inherent in a particular spiritual culture (nationwide or denominational). In Christianity baptism is one of acknowledged symbols. On the one hand, it is the Sacrament; on the other hand, – a public testimony of repentance and public "pledge of a clear conscience toward God" (1 Peter 3:21). Importantly, water is visual symbol of the inner purification of the" soul baptized; also

the anointing by the priest symbolizes the graceful touch of the Holy Spirit. Thus, repentance is understood as the second baptism stressing its purifying and renovating power (Ilarion (Alfeyev), iyerom. 1996: 162).

At the fifth level, the shades of senses, which are entailed by reflexion on a lingual form of a concept, senses that incorporate its folk and etymological perception have been unveiled. One of such shades of the concept REPENTANCE is a meaning *to turn away*; "repent" was a military command which meant to make an "about face" (to turn around 180 degrees). Such meaning precisely explains and demonstrates the essence of the act of repentance as turning away from sin not in words but in deeds (Smalley 2016: 80).

The sixth level, as we have already delineated earlier, reveals various shades of a concept sense that are entailed by interpretation and living through (experiencing) the concept by different communities at various times (general church life, monasterial life etc.). Thus, the sense of a concept REPENTANCE is enriched and expanded through such notions, as "atonement", "asceticism", "hermitage", and "anchorite", that are tightly connected with a monasterial movement in Ukrainian lands; with the lifestyle of monks who had deliberately withdrawn from secular world, lived a solitary life dedicated to prayer and confession, according to rigid principles of asceticism.

The last seventh level of senses – the conceptual features incorporating individual-specific shades of senses, personal shades of senses reflected in idiolects of separate representatives of religious community.

***8. Conclusions.***

In conclusion, we will point out that theolinguistic approach to reconstruction of concepts allows disclosing cognitive mechanisms of their formation as mental structures of consciousness and sensecreating components of the picture of the world. On the one hand, the theoconcept is a basic component of religious picture of the world; on the other hand, it is a multidimensional formation which embodies experience of a man (people), both physical and spiritual. This gives reason to believe that it is the diachronic-synchronic vector that is essential for such type concepts structure reconstruction. With its help, it becomes possible to establish not only a field arrangement of the concept structure but also to restore the origins of its mentalization, i.e. primary conceptual features of a kernel area formation.

Theoconcepts are abstract ontological-intuitive mental entities, the structure of which comprises seven levels. The theoconcept REPENTANCE is a mental formation of cognitive-matrix format which also comprises seven spheres. In the article the cognitive matrix of a theoconcept is explicated as a system of various spheres (seven in our case) of its organization within religious picture of the world that allows presenting all necessary knowledge about it as a mental formation.

It is found that the kernel content of the theoconcept REPENTANCE has been developed on the base of a meaning "turn", which, according to the Biblical context of conceptualization, reconstructs the essence of repentance (level one). The kernel-centered (circumnuclear) area is formed by such meanings, as "confession", "sacrament", "penance", "reconciliation", "testament", "reunion", with basics of Orthodox doctrine as cognitive contexts (level two). Ethnic colouring of the concept meaning is revealed through such spiritual sense of the theoconcept REPENTANCE, as "congregational confession" (level three). The image of repentance as "the second baptism" emerges in the context of Christian symbolic meanings (level four). The shade of meaning "to turn away" ("military command") has been developed in a process of its folk-etymological conceptualization, and constitutes the periphery of the concept (level fife). In a context of monastic movement in Ukrainian lands, and life of monks (level six) shades of meanings "atonement", "asceticism", "hermitage", and "anchorite" are being actualized. The last level (distant area) of senses

embraces the individual-specific shades of senses, personal shades of senses of the concept under consideration, present in idiolects of the faithful.

Finally, the results indicate that reconstructed sense levels are the cognitive contexts to interpret the kernel meaning of the theoconcept REPENTANCE. They bring into focus its other senses, which interplay and produce its conceptual multi-aspectedness and multi-dimensionality that is nothing but matrix.

***References***


Atran, S. (1999). Folkbiology. *The MIT Encyclopedia of the Cognitive Sciences*. eds R. Wilson, Fr. Keil. MIT Press. 316–317.

Babushkin, A. P. (1997). *Tipy kontseptov v leksiko-frazeologicheskoy semantike yazyka, ikh lichnostnaya i natsional'naya spetsifika* [Types of concepts in the lexico-phraseological semantics of the language, their personal and national specificity]: avtoref. dis. ... d-ra filol. nauk: 10.02.19. Voronezh. 41.

Barrett, J. L. (2008). Coding and quantifying counterintuitiveness in religious concepts: Theoretical and methodological reflections. *Method & Theory in the Study of Religion*. 20. P. 308–338.

Barrett, J. L., Burdett E. R., Porter T. (2009). Counterintuitiveness in folktales: Finding the cognitive optimum. *Journal of Cognition and Culture*. 9. 271–287.

Baumard, N, Boyer, P. (2013). Explaining moral religions. *Trends in Cognitive in Science*. 17(6). P. 272–280. Retrieved from http://dx.doi.org/10.1016/j.tics.2013.04.003.

Belyutin, R. V. (2003). *Metaforicheskaya reprezentatsiya abstraktnykh kontseptov GEDANKE I WORT: kognitivnyy aspekt (na materiale nemetskogo yazyka)* [Mataphorical representation of abstract concepts GEDANKE AND WORT: cognitive aspect (based on the German language material)]. Smolensk: SGU. 216.

Blazhennyy Avgustin (1996). *Enkhiridion ili o vere, nadezhde i lyubvi* [The Enchiridion or on faith, hope, and love]. Kiev: UTSIMM-PRESS. 413.

Boldyrev, N. N. (2001). *Kognitivnaya semantika: Kurs lektsiy po angliyskoy filologii* [Cognitive semantics: course of lectures in English Philology]. Tambov: Izd-vo Tamb. un-ta. 123.

Boyer P., Barrett J. L. (2015). Domain Specificity and Intuitive Ontology. *The Handbook of Evolutionary Psychology*. eds D. M. Buss, J. Wiley & Sons. Hoboken, NJ, USA. Retrieved from http://dx.doi.org /10.1002/9780470939376.ch3.

Boyer, P, Ramble, C. (2001). Cognitive Templates for Religious Concepts: Cross-cultural Evidence for Recall of Counter-Intuitive Representations. *Cognitive Science*. 25. 535–564.

Boyer, P. (1994). *The Naturalness of Religious Ideas: A Cognitive Theory of Religion*. Berkeley: University of California Press. 315.

Boyer, P. (2000) Functional Origins of Religious Concepts: Conceptual and Strategic Selection in Evolved Minds [Malinowski Lecture 1999]. *Journal of the Royal Anthropological Institute*. 2000. 6. 195–214.

Bruner, Dzh. (1977). *Psikhologiya poznaniya* [Psychology of cognition]. M. 412.

Bugayeva, I. V. (2014). *Teolingvistika: teologiya + lingvistika?* [Theolinguistics: theology + linguistics? Retrieved from http://www.docplayer.ru/61738213-Teolingvistika-teologiya-lingvistika.html

Cherkhava, O. O. (2011). *Anglomovne bibliyne prorotstvo yak riznovid fideïstichnogo diskursu (na materiali KING JAMES BIBLE)* [Reconstruction of theolinguistic religious popular discourse matrix (based on the KING JAMES BIBLE]: avtoref. dis. ... kand. filol. nauk. Odesa: B.v. 20.

Cherneyko, L. O. (2010). *Lingvofilosofskiy analiz abstraktnogo imeni* [Linguophilosophical analysis of abstract name]. M. : LIBROKOM. 272.

Churchland, P. (1989). Folk Psychology and the Explanation of Human Behavior. *Neurocomputational Perspective*. ed. A. Churchland. Cambridge, MA: MIT Press. 111–128.

Croft W., Cruse D. A. (2004).. *Cognitive Linguistics* (Cambridge Textbooks in Linguistics). Cambridge University Press. 356.

Florenskiy, P. (1999). *Svyashch. Soch.: v 4 t.* [Collection works:" in 4 vol.]. M. : Mysl. 3(2). 621.

Fodor, J. (1968). The Appeal to Tacit Knowledge in Psychological Explanation. *Journal of Philosophy*. 65. 627–640.

Gadomskiy, A. K. (2004). O lakunakh v sisteme lingvisticheskoy nauki: problema vzaimodeystviya yazyka i religii [On lacuna in a system of linguistic science: the problem of language and religion interaction]. *Kultura narodov Prichernomorya*. 1. 49. 164–167.

Gonce, L. O., Upal, M. A., Slone, D. J., Tweney R. D. (2006). Role of context in the recall of counterintuitive concepts. *Journal of Cognition and Culture*. 6. 521–547.

Ilarion (Alfeyev), iyerom. (1996). *Tainstvo very: vvedeniye v pravoslavnoye dog-maticheskoye bogosloviye* [Mistery of Faith: introduction to Orthodox dogmatic theology]. M. : Izd-vo Bratstva Svyatitelya Tikhona. 288.

Johnson, C. V. M., Kelly S. W., Bishop P. (2010). Measuring the mnemonic advantage of counter-intuitive and counter-schematic concepts. *Journal of Cognition and Culture*. 10. 109–121.

Keil, F. C. (1979). S*emantic and Conceptual Development: An Ontological Perspective*. Cambridge, MA: Harvard University Press.

Korolyova A. V. (2011). Diakhronichnyi vektor doslidzhennia struktur svidomosti y myslennia [Diachronic vector of investigating the consciousness and cognition structures]. *Visnyk KNLU. Seriia Filolohiia*. 4. 1. 52–58.

Kubryakova, Ye. S. (1997). *Kratkiy slovar kognitivnykh terminov* [Concise dictionary of cognitive terms]. eds Ye. S. Kubryakova, V. Z. Demyankov, Yu. G. Pankrats, L. G. Luzina. pod obshchey red. Ye. S. Kubryakovoy. M. : Filol. f-t MGU im. M. V. Lomonosova. 245.

Lakoff, G. (1990). *Women, Fire, and Dangerous Things: What Categories Reveal about the Mind*. Chicago: University of Chicago Press. 614.

Lipman, O., Bogen, H. (1923). *Naive Physik*. Leipzig.

Lopez, A., Atran, S., Coley, J. D., Medin, D. L. et al. (1997). The tree of life: Universal and cultural features of folkbiological taxonomies and inductions. *Cognitive Psychology*. 32(3). 251–295.

Mamardashvili, M. K. (1997). *Strela poznaniya (nabrosok estestvennoistoricheskoy gnoseologii)* [Arrow of cognition: sketches of natural-historical epistemology]. M. : Shkola "Yazyki russkoy kultury". 304.

Neretina, S. S. (1994). *Slovo i tekst v srednevekovoy kulture. Kontseptualizm Petra Abelyara* [Word and text in medieval culture. Abelard's conceptualism]. M. : Gnozis. 216.

Neretina, S. S. (2010). *Kontsept: v 4 t.* [Concept: in 4 vol.]. M. 2. 306.

Nikitin, M. V. (2003). *Osnovaniye kognitivnoy semantiki* [The fundamentals of cognitive semantics]. SPb. : Iz-vo RGPU im. A. I. Gertsena. 277.

Popova, Z. D., Sternin, I. A. (2001). *Ocherki po kognitivnoy lingvistike* [Essays on cognitive linguistics]. Voronezh: Istoki. 191.

Popova, Z. D., Sternin, I. A. (2007). *Kognitivnaya lingvistika* [Cognitive linguistics]. M. : AST, Vostok-Zapad. 315.

Postovalova, V. I. (2012). Religioznyye kontsepty v teolingvisticheskom predstavlenii [Religious concepts in Orthodox Christian Worldview (A theolinguistic analysis)]. *Teolingvistika*. pod red. A. Gadomskogo, K. Koncharevich. Beograd: Izdatelstvo: Univerzitet u Beogradu – Pravoslavni bogoslovski fakultet. 143–152.

Postovalova, V. I. (2014). Afonskiy spor ob Imeni Bozhiyem v kontekste stanovleniya mirosozertsaniya i dukhovnoy zhizni Rossii XX–XXI vv. [The Athon dispute over the name of God in a context of establishment of worldview and spiritual life in Russia of XX-XXI c.]. *Vestnik NGU*.. Novosibirsk: Izd-vo NGU. 12. 2. Seriya: Lingvistika i mezhkul'turnaya kommunikatsiya. 50–65.

Rosch, E. H. (1973). Natural categories. *Cognitive Psychology*. 4. 328–350.

Rosch, E. H. (1978). Principles of Categorization. *Cognition and Categorization*. Hillsdale, N.Y. : Lawrence Erlbaum. 27–48.

Selivanova, O. O. (2008). *Suchasna linhvistyka: napriamy ta problem* [Contemporary linguistics: directions and problems]. Poltava: Dovkillia-K. 712.

Slone, D. J., Gonce, L., Upal, M. A., Edwards, K., Tweney R. (2007). Imagery effects on recall of counterintuitive concepts. *Journal of Cognition and Culture*. 7. 355–367.

Smalley, M., Scot, K. S. (2016). *Knowing Him.Lulu.com*. 116.

Spelke, E. (1991). Physical knowledge in infancy: Reflections on Piaget's theory. *The epigenesis of mind: Essays in biology and cognition*. eds S. Carey, R. Gelman, (pp.). Hillsdale. Nl: Lawrence Eribaum. 133–169.

Stepanenko, V. A. (2006). *Slovo / Logos / Imya – imena – kontsept – slova: sravnitel'no-tipologicheskiy analiz kontsepta "Dusha. Seele. Soul" (na materiale russkogo, nemetskogo i angliyskogo yazykov)* [Word / Logos / Name – names – concept – words: comparative-typological analysis of the concept "Душа. Seele. Soul" (based on material of the Russian, German, and English languages)]: avtoref. dis. … dokt. filol. nauk. Irkutsk. 38.

Stepanov, Yu. S. (1997). K*onstanty. Slovar russkoy kultury. Opyt issledovaniya* [Constants. Dictionary of Russian culture. Experience of investigation]. M. : Shkola "Yazyki russkoy kultury". 824.

Sternin, I. A. (2015). *Yazyk i myshleniye: uchebno-metodicheskoye posobiye* [Language and cognition: study manual]. M-Berlin : Direkt-Media. 25.

Upal, M. A., Owsianiecki, L., Slone, D. J., Tweney, R. D. (2007). Contextualizing counterintuitiveness: How context affects comprehension and memorability of counterintuitive concepts. *Cognitive Science*. 31. 1–25.

Whiten, A. (1991). *Natural Theories of Mind: The Evolution, Development and Simulation of Everyday Mind-reading*. Oxford: Blackwell.

**Бібліографічний опис:**

Ізюмцева, Г. В. (2018). Реконструкція структури теоконцепту як багатовимірного утворення матричного формату. *Науковий часопис Національного педагогічного університету імені М. П. Драгоманова. Серія 9 Сучасні тенденції розвитку мов*. К. Вип. 17. С. 57–67. DOI: https://doi.org/10.31392/NPU-nc.series9.2018.17.05

***Анотація***

*У статті розглянуто проблему реконструкції структури теоконцепту як смислоутворювального базового компонента релігійної картини світу. Витлумачено теоконцепт як багатовимірне утворення, яке втілює фізичний і духовний досвід людини (народу) і водночас характеризується історично зумовленою світоглядною складовою. Наведено аргументи щодо доцільності розгляду структури концепту з позицій діахронно-синхронного підходу. Основну увагу приділено вивченню теоконцептів на тлі інших типів концептів та їх модусів, насамперед, як абстрактних онтологічно-інтуїтивних ментальних сутностей.*

*Здійснено реконструкцію сімох рівнів структури теоконцепту REPENTANCE, яка засвідчує, що це утворення має когнітивно-матричний формат. Виявлено, що ядерний зміст теоконцепту сформований значенням "turn", яке згідно з Біблійним контекстом відтворює сутність каяття (перший рівень). Навколоядерну зону утворюють значення "confession", "sacrament", "penance", "reconciliation", "testament", "reunion", когнітивними контекстами яких є основи Православного вчення (другий рівень). Етнічна забарвленість значень концепту виявляється через розкриття духовного смислу теоконцепту REPENTANCE "congregational confession" (третій рівень). Образ каяття як "the second baptism" виникає на тлі християнських символічних значень (четвертий рівень). Периферійну зону концепту становить смисловий відтінок значення "to turn away" ("військова команда"), що розвинулося як результат народно-етимологічного його осмислення (п'ятий рівень). У контексті чернечого руху (шостий рівень) актуалізуються смислові відтінки значень "atonement", "asceticism", "hermitage", "anchorite". Останній рівень (далеку зону) охоплює індивідуально-смислові, особистісні відтінки досліджуваного теоконцепту, наявні в ідіолектах вірян.*

*Установлено, що реконструйовані смислові рівні – це і є когнітивні контексти інтерпретації ядерного значення теоконцепту REPENTANCE, які висвічують інші його смисли, що взаємодіють між собою й утворюють його смислову поліаспектність і багатовимірність, тобто матрицю.*

***Ключові слова:*** *теолінгвістика, теоконцепт REPENTANCE, реконструкція, когнітивна матриця, польова модель теоконцепту.*

**DOI:** https://doi.org/10.31392/NPU-nc.series9.2018.17.06
**UDC:** 81'374.4

**Yan V. Kapranov**
Kyiv National Linguistic University, Kyiv, Ukraine

# DIACHRONIC INTERPRETATION OF NOSTRATIC *wol[a] ON PROTO-INDO-EUROPEAN *(e)wel- (Gr hw- / ew-) AND PROTO-ALTAIC *ulu (~ -o) (According to S. A. Starostin's Version)

**Bibliographic Description:**

Kapranov, Y. V. (2018). Diachronic Interpretation of Nostratic Etymon *wol[a] Based on Proto-Indo-European *(e)wel- (Gr hw- / ew-) and Proto-Altaic *ulu (~ -o) Forms (According to S. A. Starostin's Version). *Scientific Journal of National Pedagogical Dragomanov University. Series 9. Current Trends in Language Development*. Kyiv. Vol. 17. p. 68–80. DOI: https://doi.org/10.31392/NPU-nc.series9.2018.17.06

***Abstract***

*The article represents the diachronic interpretation of the Nostratic *wol[a] verified by S. A. Starostin on the Proto-Indo-European *(e) wel- (Gr hw- / ew-) and Proto-Altaic *ulu (~ -o). These data were taken for analysis from the International Etymological Database Project "The Tower of Babel". The notion of etymon in general and the Nostratic one in particular have been specified. The Nostratic etymon is understood as a phonomorphological and semantic complex that is interpreted based on the reconstructed etymons at the level of every language family.*

*The following data has been demonstrated: using the comparative-historical method, the etymologist-macrocomparatist performed the external reconstruction of the Proto-Indo-European *(e) wel- (Gr hw- / ew-) "great number; to heap" made on Proto-Tocharian *w'ältse; Ancient Greek *ḗlomai̯ (ḗlómeno, ḗlésthō), *wáli-; Proto-Slavic *velьmi, -ma; *velьjь, *velīkъ; *vālъ, *vālovъ, *vālī́tī; Proto-Baltic *wal-ī̂-, performed with the help of internal reconstruction, as well as the Proto-Altaic *ulu (~ -o) "big, many; good" made on Proto-Turkic *ulug; Proto-Mongol *olon; Proto-Tungus-Manchu *ule-; Proto-Korean *ōr-. The procedural operations of S. A. Starostin performed with the use of the method of diachronic interpretation have been commented. It helped to assume that the Proto-Language forms of etymons at the level of the language family reach the Nostratic *wol[a]. This made it possible to establish and substantiate the degrees of language relationship between the reconstructed etymons of the two language families and the Nostratic etymon: within the Indo-European language family the following degrees have been registered: trivial – between the Proto-Indo-European and Proto-Slavic; notable – between the Proto-Indo-European and Proto-Tocharian, Ancient Greek, Proto-Slavic and Proto-Baltic; within the the Altaic language family: trivial – between the Proto-Altaic and Proto-Turkic; notable – between the Proto-Altaic and Proto-Tungus-Manchu; distant – between the Proto-Altaic and Proto-Mongol, Proto-Korean.*

***Keywords:*** *Nostratic, Proto-Indo-European and Proto-Altaic forms, comparative-historical method, method of diachronic interpretation, degrees of language relationship.*

***1. Introduction.***

The Linguistic Comparative Studies and other fields of modern anthropooriented linguistics (T. Gamkrelidze, V. Ivanov (Gamkrelidze, Ivanov 1984), M. Makovskiy (Makovskiy 1982), V. Neroznak (Neroznak 1988), S. Starostin (Starostin 1989), S. Yakhontov (Yakhontov 1991), et al.) studies a human language in general and different world languages in particular. One of the major problems that is far from its solution is ***the origins of languages*** (M. Tamariz (Tamariz 2017), J. Heath (Heath 2015), et al.), mainly the principles of their relationship (W. Heeringa, F. Wet, G. Huyssteen (Heeringa et al. 2015)). The founders of Comparative-Historical Linguistics, as well as all subsequent generations (Th. Benfey (Benfey 1869), F. Dietz (Dietz 1836–1845), G. Curtius (Curtius 1862, 1867), A. Pott (Pott 1856) et al.) tried to prove it, while the fierce opponents also expressed the thoughts on this matter (among which there were also Neogrammarians). Nowadays this issue is considered comprehensively with the use of language data, research methods in linguistics, as well as the genetics data, neurophysiology, psycholinguistics, anthropology, archeology, paleolinguistics methodology, etc. But the main disputable issue since the time of the Classical Comparative Linguistics is the notion of etymon and the methodological procedure for its modelling, or the reconstruction of the Proto-Language Form, or the Form of Proto-Language, the Proto-Form (G. Jacques (Jacques 2017), A. Versloot (Versloot 2017), P. Zywiczynski, N. Gontier, S. Wacewicz (Zywiczynski et al. 2017)) as the initial state of the one or another language unit or group of languages that can hypothetically witness the origins of languages from the common ancestor.

More than 200 years have passed and the notion of language relationship is topical and it remains one of the central ones in the monogenetic theory. Its supporters tend to think that the area of the emergence of a human being and, accordingly, a human language was monocentric and existed on the territory of Eastern Africa (see the works of T. Bromage (Bromage 1995), R. Leakey (Leakey 1964), F. Tobias (Tobias 1991), etc.). According to this hypothesis, the Proto-language gave rise to the Proto-Languages of numerous language families because of the resettlement of ancient people from Africa to Eurasian continent and consequently because of the divergence processes of its dialects about 30–40 thsd years ago.

***The monogenetic theory*** was developed by A. Thrombetti, the Italian neolinguist, and by M. Svadesh, the American linguist, who united the language families of into larger formations that were later called the macrofamilies. They also assumed the links / connections between these language taxons. This gave rise to the Macrocomparative Studies (A. Bomhard (Bomhard 1995, 2015), A. Dolgopolsky (Dolgopolsky 1998, 2008), V. Illich-Svitych (Illich-Svitych 1971), S. Starostin (Starostin 1989), etc.) as a new stage in the development of Linguistic Comparative Studies. At the present stage of development of the Macrocomparative Studies the monogenetic theory is considered to be more likely and has numerous supporters in the world scientific community. In particular, in Ukraine the monogenetic theory was supported by O. Melnychuk (1921–1977) (Melnychuk 1991), but now it is supported by O. Tkachenko (Tkachenko 2007), Yu. Mosenkis (Mosenkis 2007), A. Korolyova (Korolyova 2018) and other macro-comparative linguists. In the meantime ***the*** alternative ***polygenetic hypothesis*** is based on the assumption that a human being originated in at least two places on the Globe – in Eastern Africa (the Nostratic macrofamily (G. Jucquois (Jucquois 1996), Kh. Menges (Menges 1989)) and in Southern Asia (the Sino-Caucasian macrofamily (S. Starostin (Starostin 1996), A. Vovin (Vovin 2002), et al.).

***2. Aim and Objectives.***

The **aim** of the paper is to represent the versions of S. A. Starostin of the diachronic interpretation of the Nostratic *wol [a] on the Proto-Indo-European *(e)wel- (Gr hw- / ew-) and Proto-Altaic *ulu (~ -o).

***3. Results.***

***The Nostratic hypothesis*** that was formulated by H. Pedersen (Pedersen 1903), the Danish scholar, in 1903 and assumed the distant relationship among languages in Europe, Northern, Western Asia and Northern Africa has become especially popular in linguistics in the 50–60 of the XX century. That is why, it was created into the ***Nostratic linguistics*** as a separate independent field of knowledge, which investigates the genetic relationship among languages of the Nostratic macrofamily, including Indo-European, Afro-Asiatic, Kartvelian, Dravidian, Ural and Altaic language families (according to the V. Illich-Svitych's version).

Nowadays the genetic relationship of the languages of the Nostratic macrofamily is proved by the presence of a large number of morphemes marking relationship that reach the ***Nostratic etymon***, i.e. the reconstructed Proto-Form at the level of every language family and represented in the following lexicographic sources: "Nostratic Dictionary" (A. Dolgopolsky), the International Etymological Database Project "The Tower of Babel" (S. Starostin), "A Comprehensive Introduction to Nostratic Comparative Linguistics With Special Reference To Indo-European" (A. Bomhard) etc.

The term of the "Nostratic Proto-Form" was consistently used in the works of C. Babayev, N. Andreyev, A. Militaryov, S. Starostin et al.

To prove the genetic relationship of the languages of the Nostratic macrofamily the special ***method of diachronic interpretation*** (according to O. Szemerényi (Szemerényi 1980)) of the Nostratic Proto-Form, or Etymon that is based on *the genetic principle* has been developed. It consists of two methodological stages: ***the comparative-historical method*** with the procedures of the internal and external reconstruction was conducted on the first stage and it helped to prove the genetic relationship at the level of every language family; ***the method of mass comparison*** (according to J. Greenberg (Greenberg 1957)) was conducted on the second stage and it helped to compare the correspondences between the reconstructed forms of every language family that was involved to comparison.

It should be noted that the diachronic interpretation of the Nostratic ***wol[a]** "big" represented on the International Etymological Database Project "The Tower of Babel" (Starostin URL: http://starling.rinet.ru) was based on the analysis of the genetic data of 5 language families (Indo-European, Altaic, Ural, Dravidian, Eskimo-Aleut).

It should be traced how the genetic data of the **Indo-European** and **Altaic language families**, as well as their reconstructed forms, have become the means for the diachronic interpretation of the above-mentioned Nostratic.

***3.1. Reconstruction of the Indo-European *(e)wel- (Gr hw- / ew-) with the following meanings: 1) "definite / indefinite quantity", 2) "action".***

First, the **Indo-European language family** should be taken into account, at the level of which 3 language groups (Tocharian, Slavic, Baltic) and Greek language were involved to comparison. The genetic data allowed to reconstruct the intermediate Proto-Language forms (Proto-Tocharian, Ancient Greek, Proto-Slavic, Proto-Baltic). In this turn, they helped to demonstrate the reconstruction of the **Proto-Indo-European *(e)wel- (Gr hw- / ew-)** with main meaning "**great number; to heap**".

At the level of *the Tocharian language group* the following genetic data were involved to comparison: Tocharian A wälts "thousand" waltsurā "in brief"; Tocharian B yaltse "thousand", walke "for a long time", wälts- "put together, press together". The form of expression – the phonemic / phonetic organization – demonstrates the vowels ä / a and consonants w, l, t, s typical for Tocharian A, B. However, the vowels y, e and consonant k can be traced in the Tocharian B. The attention should be drawn to the fact that the form of expression – the morphological organization – allows us to assume that the Tocharian A wälts "thousand" and Tocharian B yaltse "thousand" are numerals, Tocharian A waltsurā "in

brief" and Tocharian B walke "for a long time" are adverbs, Tocharian B wälts- "put together, press together" is a verb.

The form of content – the semantic organization – coincides in both Tocharian A wälts "thousand" and Tocharian B yaltse "thousand", which, probably, became the constructs for the reconstruction of not only the form of content, but also the form of expression of the Proto-Tocharian. If the first position of the etymon is occupied by the consonant *w, which is traced in most of the above-mentioned cases; the second position is occupied by the vowel *ä; the third, fourth and fifth positions were occupied by the consonants *l, *t, *s, as they are typical for Tocharian A and Tocharian B. According to the scholar's version, the etymon ends with the vowel *e, because, referring the Tocharian A waltsurā; Tocharian B yaltse, walke, wälts-, it should be assumed that a vowel must necessarily be represented after three consonants. The vowel *e was chosen not accidentally, it is traced in the Tocharian B yaltse, walke.

Thus, the reconstruction of the **Proto-Tocharian *w'ältse** "thousand" was proposed.

At the level of *the Greek language* the following genetic data were involved to comparison: ep., ion. ḗléō, dor., el. weleō, etc.

The form of expression – the phonemic / phonetic organization – demonstrates the correspondence of the vowels e, o, consonants l, m, w; the form of expression – the morphological organization – is represented by the nouns; the form of content – the semantic organization – corresponds to the meaning pressing, stretching".

Thus, the reconstructions of the **Ancient Greek *ḗlomai̯ (ḗlómeno-, ḗlésthō), *wáli-** were proposed.

At the level of *the Slavic language group* the following genetic data were involved to comparison: 1) *the Eastern Slavic*: Ukrainian вели́кий, Old Eastern Slavic; 2) *the Southern Slavic*: Old Slavic великъ, Bulgarian вели́к, Serbo-Croatian ве̏ликӣ, Slovenian vélik; 3) *the Western Slavic*: Czech veliký, velký, Slovak veliký, vel'ký, Polish wielki, Upper Lusatian wulki *language subgroups*.

The form of expression – the phonemic / phonetic organization – demonstrates the following correspondences: the vowels e, и and consonants в, л, к can be traced <u>in the first group</u> (Ukrainian вели́кий, Old Eastern Slavic, Old Slavic великъ, Bulgarian вели́к, Serbo-Croatian ве̏ликӣ); the vowels e, i and consonants v, l, k can be traced <u>in the second group</u> (Slovenian vélik, Czech veliký, velký, Slovak veliký, vel'ký); the vowel i and consonants w, l, k can be traced <u>in the third group</u> (Polish wielki, Upper Lusatian wulki). Therefore, the consonants в or v, л or l, к or k are typical for the above-mentioned, but the vowel e is typical for the first and the second ones. The form of expression – the morphological organization – allows to assume that all of them are probably the nouns and / or adjectives. The form of content – the semantic organization – is "great number".

Due to the available data, the stem *vel is typical for the following reconstructed forms *velьmi, -ma; *velьjь, *velīkъ. The scholar also gives the variants of Proto-forms: *vālъ, *vālovъ, *vālī́tī, which have the stem *vāl with long proto-cowel *ā. At the same time the consonant w occupied the first position instead of v in the Polish wielki and Upper Lusatian wulki. However, according to morphophonological transcription represented in "Card Catalog of Etymological dictionary of Slavic languages" (Russ. "Картотека Этимологического словаря славянских языков"), eds S. Kotkova, A. Sumkina, the proto-consonants *v (*w, *u̯) are considered to be bilabial ones that are characterized by the bilabialism (Kartoteka Etimologicheskogo slovarya slavyanskikh yazykov 1967: 139). Moreover, S. A. Starostin also provides the short forms from the Russian вели́к, велика́, велико́.

Thus, the reconstruction of the Proto-Slavic ***velьmi, -ma; *velьjь, *velīkъ; *vālъ, *vālovъ, *vālī́tī** were proposed.

At the level of the *Baltic language group* the following genetic data were involved to comparison: *the Eastern Baltic language subgroup*: Lithuanian valī́ti "gather". The form of expression – the phonemic / phonetic organization – demonstrates the following correspondences: the vowel a, i, ī́ and consonants v, l, t. The form of expression – the morphological organization – allows to assume that the Lithuanian valī́ti is the verb. The form of content – the semantic organization – is "gather".

Due to the available data, the form of expression – the phonemic / phonetic organization – is represented be the proto-vowels *a, *ī̂ and proto-consonants *w, *l typical for the reconstructed form; the form of expression – the morphological organization – is the verb; the form of content – the semantic organization – was assigned the 'accumulation' effect.

Thus, the reconstructions of the the **Proto-Baltic *wal-ī̂- vb.** "gather" was proposed.

By the way, all the above-mentioned genetic data show their own sense that is represented by this or that lexicosemantic variants (hereinafter – LSV): 1) *size / length*: walke "for a long time"; 2) *definite / indefinite quantity*: Tocharian A wälts "thousand"; Tocharian B yaltse "thousand"; 3) *action*: wälts- "put together, press together"; Lithuanian valī́ti "gather"; 4) *measure / volume*: waltsurā "in brief"; 5) *size*: Ukrainian вели́кий, Old Eastern Slavic, Old Slavic великъ, Bulgarian вели́к Serbo-Croatian ве̏ликӣ, Slovenian vélik, Czech veliký, velký, Slovak veliký, vel'ký, Polish wielki, Upper Lusatian wulki.

The reconstruction of the **Proto-Indo-European *(e)wel- (Gr hw- / ew-)** with the main meaning "**great number; to heap**" was performed based on the reconstructed forms at the following language groups: 1) the Proto-Tocharian *w'ältse "thousand"; 2) the Ancient Greek *ḗlomai̯ (ḗlómeno-, ḗlésthō), *wáli-; 3) the Proto-Slavic *velьmi, -ma; *velьjь, *velīkъ; *vālъ, *vālovъ, *vālī́tī; 4) the Proto-Baltic *wal-ī̂- vb "gather".

Analysing the above-mentioned reconstructed forms at the ***phonological*** / ***phonemic***, ***morphological*** and ***semantic levels*** (Szemerényi 1980), the following characteristics may be outlined.

First, at the phonological / phonemic level the given etymons demonstrate the following correspondences: the Proto-Language vowel *ä / *a and consonants *w, *l typical for the Proto-Tocharian, Ancient Greek, Proto-Slavic and Proto-Baltic. However, if first position of the etymon is occupied by the consonant *w taken from the Proto-Tocharian and Proto-Baltic, the second one is occupied by the vowel *e taken from the Proto-Slavic and the consonant *l taken from the Proto-Tocharian, Ancient Greek, Proto-Slavic and Proto-Baltic. Second, it should be noted that every Proto-Language has their own morphological organization: the Proto-Tocharian is the numeral, the Ancient Greek is the adjective, the Proto-Slavic are the nouns, the Proto-Baltic is the verb. Third, the form of content – the semantic organization – demonstrates the following correspondences: the "definite / indefinite quantity" layer is typical for the Proto-Tocharian, Ancient Greek and Proto-Slavic, the "action" layer – for the Proto-Baltic.

Thus, it should be assumed that the form of expression of the **Proto-Indo-European *(e)wel- (Gr hw- / ew-)** was modelled based on all the reconstructed forms at every language group (Tocharian, Slavic, Baltic), as well as the Greek language, the form of content – "**great number; to heap**" – represented by the two LSVs – "definite / indefinite quantity" and "action".

***3.2. Reconstruction of the Proto-Altaic *ulu (~ -o) with the following meanings: 1) "size", 2) "definite / indefinite quantity", 3) "quality / characteristic / assessment".***

Second, the **Altaic language family** should be taken into account, at the level of which 4 language groups (Turkic, Mongol, Tungus-Manchu) and Korean language were involved to comparison. The genetic data allowed to reconstruct the intermediate Proto-Language forms (Proto-Turkic, Proto-Mongol, Proto-Tungus-Manchu, Proto-Korean). In this turn, they helped to demonstrate the reconstruction of the **Proto-Altaic *ulu (~ -o)** with the main meaning **"big, many; good"**.

At the level of the *Turkic language group* the following genetic data were involved to comparison: 1) *Ancient Turkic* uluɣ 1; 2) *Karluk*, Kara-Khanid uluɣ 1 (MK, KB); Uyghur uluɣ 1; 3) *Oguz*: Turkish ulu 2; Azerbaijani ulu 2; Turkmen ulɨ 1; 4) *Kipchak*: Tatar ölkɛn 1; Bashkir ölkän 1; Kazakh ulken 1; Nogai 1; Karakalpak 1; Balkar ullu 1; 5) *Middle Turkic* uluɣ, uluq 1 (Pav. C.); 6) *Khakass* (*Kyrgyz*): Khakassi uluɣ 1; 7) *Yakut*: Yakut ulaxan, ulu 1; Dolgan ulakan, ulu 1; 8) *Sayan (Tobas)*: Tuvan uluɣ 1; Tofalar uluɣ 1; 9) *Mountain-Altaic (Central-Eastern)*: Kyrgyz uluu 2 *language subgroups*.

The form of expression – the phonemic / phonetic organization – demonstrates the vowel u and consonant l typical for the Ancient Turkic, Kara-Khanid, Uyghur, Turkish, Azerbaijani, Turkmen, Balkar, Middle Turkic, Khakassi, Yakut, Dolgan, Tuvan, Tofalar, Kyrgyz. However, the vowel ö can be observed only in Tatar and Bashkir, the vowel ü – in the Nogai and Karakalpak; the consonants k, n – in Tatar, Bashkir, Kazakh, Nogai, Karakalpak and Dolgan. The attention should be also drawn to the consonant ɣ at the end of the above-mentioned genetic data in some languages (Ancient Turkic, Kara-Khanid, Uyghur, Middle Turkic, Khakash, Tuvan, Tofalar). In this case, the meanings show that the form of expression – the morphological organization – is the adjectives. The form of content – the semantic organization – the first meaning 1) big – can be traced in: Ancient Turkic uluɣ 1; Kara-Khanid uluɣ 1; Uyghur uluɣ 1; Turkmen ulɨ 1; Tatar ölkɛn 1; Bashkir ölkän 1; Kazakh ulken 1; Nogai üjken 1; Karakalpak ülken 1; Balkar ullu 1; Middle Turkic uluɣ, uluq 1; Khakassi uluɣ 1; Yakut ulaxan, ulu 1; Dolgan ulakan, ulu 1; Tuvan uluɣ 1; tofalar uluɣ 1; the second meaning 2) great can be traced in: Turkish ulu 2; Azerbaijani ulu 2; Kyrgyz , uluu 2.

The form of expression of the Proto-Turkic – the phonemic / phonetic organization – was modelled with the help of the vowel *u, which occupied the first and third positions, the consonant *l – the second one, as they are typical for the Ancient Turkic, Kara-Khanid, Uyghur, Turkish, Azerbaijani, Turkmen, Balkar, Middle Turkic, Khakassi, Yakut, Dolgan, Tuvan, Tofalar, Kyrgyz. The consonant *g occupied the fourth position, as it is typical for the Ancient Turkic, Kara-Khanid, Uyghur, Middle Turkic, Khakassi, Tuvan, Tofalar. The form of expression – the morphological organization – is represented by the adjectives taken from all genetic data. The form of content – the semantic organization – is the three options: 1) "big" that is typical for the Ancient Turkic, Kara-Khanid, Uyghur, Turkmen, Tatar, Bashkir, Kazakh, Nogai, Karakalpaks, Balkarian, Middle Turkic, Khakass, Yakut, Dolgan, Tuvan and Tofalar; 2) "great" – for the Turkic, Azerbaijani, Kyrgyz. It should be noted that S. A. Starostin also proposed the third meaning: 3) "grown-up, great" that reders to the internal form of the first two meanings.

Thus, the reconstruction of the **Proto-Turkic *ulug** with the following meanings: "**1) big; 2) great; 3) grown-up, great**" was proposed.

At the level of *the Mongol language group* the following genetic data were involved to comparison: 1) *Northern Mongol*: Written Mongol olan; Middle Mongol olon, ulān, ulan; Khalkha olon; Ordos olon; Buryat olon; 2) *Western Mongol (Mongol-Kalmyk)*: Kalmyk olṇ; 3) *Southern Mongol language subgroup*: Dunsian olon; Boan oloŋ; Shari Yugur olon; Monguor olon; Dagur walan, ualen *language subgroups*.

The form of expression – the phonemic / phonetic organization – demonstrates the vowel o and the consonants l, n typical for the Written Mongol, Middle Mongol, Khalkha, Ordos, Buryat, Kalmyk, Dunsian, Boan and Monguor. However, the vowel e and consonant w can be traced in the Dagur. The form of expression – the morphological organization – is the adverbs. The form of content – semantic organization – is "many" that is typical for all the above-mentioned languages.

The form of expression of the Proto-Mongol *olon – the phonemic / phonetic organization – was modelled with the help of the vowel *o, which occupied the first and third positions, the consonants *l, *n – the second and fourth ones, respectively, as they are typical for the Middle Mongol, Khalkha, Ordos, Buryat, Dunsian, Boan and Monguor. Some reconstructed forms can be traced in the Written Mongol (the first, second, fourth positions), Kalmyk (the first, second, third positions), Dagur (the second, third, fifth positions). The form of expression – the morphological organization – is the adverbs taken from all the above-mentioned languages. The form of content – the semantic organization – is "many" that is typical for all the above-mentioned languages.

Thus, the reconstruction of the **Proto-Mongol *olon** with the meaning **"many"** was proposed.

At the level of the *Tungus-Manchu language group* the following genetic data were involved to comparison: the *Southern Western Tungus-Manchu (Jurchen-Manchu)*: Literary Manchurian ulin "goods"; the *Southern Eastern Tungus*: Ulch ule(n), Orok uliŋga, Nanai ulē (Он.); Udege uligdiga` "beautiful" *language subgroups*.

The form of expression – the phonemic / phonetic organization – demonstrates the vowel u and consonant l typical for all the above-mentioned languages (Literary Manchu, Ulch, Orok, Nanai, Udege). However, the vowel e can be traced in the Ulch, Nanai, the consonant n – in the Ulch. The form of expression – the morphological organization – is the adjectives. The form of content – the semantic organization – is "good" that is typical for the Literary Manchu, Ulch, Orok, Nanai, but "beautiful" – for the Udege.

The form of expression of Proto-Tungus-Manchu *ule- – the phonemic / phonetic organization – was modelled with the help of the vowel *u (the first position) and consonant *l (the second position), as it is typical for the Literary Manchu, Ulch, Orok, Nanai, Udege. However, the vowel *e can be traced in the Ulch and Nanai. The form of expression – the morphological organization – is the adjectives typical for all the above-mentioned languages. The form of content – the semantic organization – is "good" that is typical for the Literary Manchu, Ulch, Orok, Nanai.

Thus, the reconstruction of the **Proto-Tungus-Manchu *ule-** with the meaning **"good"** was proposed.

At the level of *the Korean language* the following genetic data were involved to comparison: Modern Korean oro-ʒi, Middle Korean ōró".

The form of expression – the phonemic / phonetic organization – demonstrates the vowel o and consonant r typical for all the above-mentioned languages. However, the vowel i and consonant ʒ are typical for the Modern Korean. The form of expression – the morphological organization – is the adverbs. The form of content – the semantic organization – is "completely, wholly" that is typical for all the above-mentioned languages.

The form of expression of the Proto-Korean *ōr- – the phonemic / phonetic organization – was modelled with the help of the vowel *o (the first position) and consonant *r (the second position), as it is typical for the Modern Korean and Middle Korean. The form of expression – the morphological organization – is the adverbs typical for all the above-mentioned languages. The form of content – the semantic organization – is "completely, wholly" that is typical for all the above-mentioned languages.

Thus, the reconstruction of the **Proto-Korean *ōr-** with the meaning **"completely, wholly"** was proposed.

By the way, all the above-mentioned genetic data show their own sense that is represented by this or that LSV: 1) *definite / indefinite quantity*: Written Mongol olan, Middle Mongol olon, ulān, ulan, Khalkha olon, Ordos olon, Buryat olon, Dugur: walan, ualen "many"; 2) *size*: Old Turkic uluɣ 1, Kara-Khanid uluɣ 1, Uyghur uluɣ 1, Turkmen ulɨ 1, Tatar ölkɛn 1, Bashkir ölkän 1 with the following meaning: 1) big; Turkish ulu 2, Azerbaijani ulu 2, Kyrgyz uluu 2 with the following meaning: 2) great; 3) *quality / characteristic / assessment*: Literary Manchu ulin "goods", Ulch ule(n), Orok uliŋga, Nanai ulẽ with the following meaning "good", Udege uligdiga` "beautiful"; 4) *length / ending of action*: Modern Korean oro-ʒi and Middle Korean ōró with the following meaning "completely, wholly".

The reconstruction of **the Proto-Altaic *ulu (~ -o)** with the main meaning **"big, many; good"** was performed based on the reconstructed forms at the following language groups: 1) the Proto-Turkic *ulug "1) big; 2) great; 3) grown-up, great"; 2) the Proto-Mongol *olon "many"; 3) the Proto-Tungus-Manchu *ule- "good"; 4) the Proto-Korean ōr- "completely, wholly".

Analysing the above-mentioned reconstructed forms at the ***phonological*** / ***phonemic***, ***morphological*** and ***semantic levels*** (Szemerényi 1980), the following characteristics may be outlined.

First, at the phonological / phonemic level the given etymons demonstrate the following correspondences: the Proto-Language vowel *u in the first position was typical for the Proto-Turkic and Proto-Tungus-Manchu, the consonant *l in the second position was typical for the Proto-Turkic, Proto-Monogolian and Proto-Tungus-Manchu. The third position was occupied by *u that is typical for the Proto-Turkic or *o – for the Proto-Mongol. Second, it should be noted that every Proto-Language has their own morphological organization: the Proto-Turkic and Proto-Tungus-Manchu are the adjectives, the Proto-Monogolian and Proto-Korean are the adverbs. Third, the form of content – the semantic organization – demonstrates the following correspondences: the "size" layer is typical for the Proto-Turkic; the "definite / indefinite quantity" layer – for the Proto-Mongol, the "quality / characteristic / assessment" layer – for Proto-Tungus-Manchu, the "length / ending of action" layer – for the Proto-Korean.

Thus, it should be assumed that the form of expression of the **Proto-Altaic *ulu (~ -o)** was modelled based on all the reconstructed forms at every language group (Turkic, Mongol, Tungus-Manchu), as well as the Korean language, the form of content – "big, many; good" – represented by the three LSVs – "size", "definite / indefinite quantity", "quality / characteristic / assessment".

***5. Genetic Data of the Indo-European and Altaic Language Families in Accordance to the Degrees of Language Relationship.***

S. Burlak and S. Starostin point out that ***the proof of language relationship*** is the evidence that the represented similarity among the languages is most likely due to their common origin (and not by chance or by contact influence). According to scholars' view, this approach consists of two stages: 1) the observation of similarities and 2) the proof that the origin of such elements from the common ancestor language is most likely than the appearance of them as a result of contacts or merely by chance. However, the scholars also note that a comparative researcher does not deal with the numerical value of probability, but with a probabilistic assessment. This leads to the possibility of discrepancies: something that one scholar seems more likely to be, the other may seem less likely (Burlak, Starostin 2005).

The most demonstrative in determining the languages relationship is the establishment of regular phonetic correspondences in the basic vocabulary list. G. Klimov assumes that "while substantiating the language relationship the decisive criterion is represented by "the systemic complex of phonological correspondences or "soundconformities" in the data of the root and affixal morphemes, as well as the entire lexemes of the languages in comparison" (Klimov 1990: 24).

S. Burlak and S. Starostin emphasize that the probability of the language relationship is increased with the multiplication of phonemes in comparison in every row of converging words. In other words, the comparison of five-phonemic words, for example, is more reliable than the comparison of the two-phonemic ones. The comparison which takes into account only the first consonant of the considered lexemes is less demonstrative than the comparison that proposes the initial group (C)CVC in the converging words. The longer the chain of phonemes that corresponds to one another in words belonging to one proto-language lexeme, appears, the less is probability of accidental coincidence (Burlak, Starostin 2005).

Let us try to make sure and establish the degrees of languages relationship within the Indo-European and Altaic language families, taking into account the chain of phonemic correspondences.

The reconstruction of the **Proto-Indo-European *(e)wel- (Gr hw- / ew-)** with the following meanings: 1) "definite / indefinite quantity" and 2) "action" was conducted with the help of the reconstructed forms at different language groups: 1) the Proto-Tocharian *w'ältse meaning 1); 2) the Antient Greek *ḗlomai̯ (ḗlómeno-, ḗlésthō), *wáli- 1); 3) the Proto-Slavic *velьmi, -ma; *velьjь, *velīkъ; *vālъ, *vālovъ, *vālĭtī 1); 4) the Proto-Baltic *wal-ī̂- vb 2).

***The trivial degree of language relationship*** can be established between the Proto-Indo-European *(e)wel- (Gr hw- / ew-) 1, 2 and Proto-Slavic *velьmi, -ma; *velьjь, *velīkъ 1, the reflexes of which are observed in the words of *the Slavic language group*: Ukrainian вели́кий, Old Slavic, Bulgarian вели́к, Serbo-Croatian ве̏ликӣ, Slovenian vélik, Czech veliký, velký, Slovak veliký, vel'ký. The three phonemic model CVC- with the same sum of 3 phonological correspondences (vowel *e, consonants *w / *v, *l) in the form of expression and the meaning "definite / indefinite quantity" in the form of content.

***The significant degree of language relationship*** can be established among the Proto-Indo-European *(e)wel- (Gr hw- / ew-) 1, 2 and Proto-Tocharian *w'ältse 1, Ancient Greek *ḗlomai̯ (ḗlómeno-, ḗlésthō) 1, *wáli-, Proto-Slavic *vālъ, *vālovъ, *vālĭtī, *vālovъ, *vālĭtī 1, Proto-Baltic *wal-ī̂- vb 2, the reflexes of which are observed in the words of the *Tocharian*: Tocharian A wälts, waltsurā; Tocharian B walke, wälts-; *Slavic*: Polish wielki, Upper Lusatian wulki *language groups*, and also *the Greek language*: Greek. ep., ion. ḗléō, aor. inf., élsai̯, ep., lyr. eélsai̯. The three phonemic model CVC- with the same sum of 2 phonological correspondences (consonants *w / *v, *l) in the form of expression, but in some cases, the first meaning "definite / indefinite quantity" in the form of content among the *Proto-Indo-European, Proto-Tocharian, Ancient Greek and Proto-Slavic*.

The reconstruction of the **Proto-Altaic *ulu" (~ -o)** with the following meanings: 1) "size", 2) "definite / indefinite quantity", 3) "quality / characteristic / assessment" was conducted with the help of the reconstructed forms at different language groups: 1) the Proto-Turkic *ulug 1); 2) the Proto-Mongol *olon 2); 3) the Proto-Tungus-Manchu *ule- 3); 4) the Proto-Korean *ōr- with a separate meaning "length / the end of an action".

***The trivial degree of language relationship*** can be established between the Proto-Altaic *ulu (~ -o) 1, 2, 3 and Proto-Turkic *ulug 1, the reflexes of which are observed in the words of *the Turkic language group*: Kara-Khanid uluɣ 1, Uyghur uluɣ 1, Turkish ulu, Azerbaijani ulu, Balkarian ullu, Yakut ulū, Dolgan ulū, Tuvan uluɣ, Tofalar uluɣ. The three

phonemic model CVC- with the same sum of 3 phonological correspondences (vowel * u, consonant *l) in the form of expression and the meaning "size" in the form of content.

***The significant degree of language relationship*** can be established between the Proto-Altaic *ulu (~ -o) 1, 2, 3 and Tungus-Manchu *ule- 3, the reflexes of which are observed in the words of *the Tungus-Manchu language group*: Literary Manchurian ulin, Ulch ule(n), Orok uliŋga, Nanai ulẽ, Udege uligdiga`. The three phonemic model CVC- with the same sum of 2 phonological correspondences (vowel *u, consonant *l) in the form of expression, but in some cases, the third meaning "quality / characteristic / assessment" in the form of content *between the Proto-Altaic* and *Tungus-Manchu*.

***The distant degree of language relationship*** can be established among the Proto-Altaic *ulu (~ -o) 1, 2, 3 and Proto-Mongol *olon 2, Proto-Korean *ōr- with a separate meaning "length / the end of an action", the reflexes of which are observed in the words of *the Mongol language group*: Written Mongol olan, Middle Mongol olon, Khalkha olon, Ordos olon, Buryat olon, Kalmyk olṇ, Dunsian olon, Boan oloŋ, Shari Yugur olon, Monguor olon; *the Korean language*: Modern Korean air-ǯi, the Eastern Korean ōró. The two phonemic model CVC- with the same sum of 2 phonological correspondences (vowel *o / *u, consonant *r /* l) in the form of expression and the meaning "definite / indefinite quantity" in the form of content.

***6. Conclusions.***

The proof of the genetic relationship of the languages of the Nostratic macrofamily, i.e. the substantiation of the Nostratic, is carried out with the help of ***the*** specially developed ***method of diachronic interpretation*** of O. Szemerényi based on the genetic principle. It consists of two methodological stages: <u>at the first stage</u>, ***the comparative-historical method*** is used with the procedures of internal and external reconstruction (the level of one language family); <u>in the second stage</u> – ***the method of mass comparison*** of J. Greenberg, with the help of which the correspondences between the already reconstructed forms at every language family are compared.

The involved genetic data of the Indo-European and Altaic language families allowed S. Starostin to perform the diachronic interpretation of the Nostratic ***wol[a]** with the following meanings: 1) "size", 2) "definite / indefinite quantity", 3) "action" based on the Proto-Indo-European *(e)wel- (Gr hw- / ew-) with the meanings: 1) "definite / indefinite quantity", 2) "action" and Proto-Altaic *ulu (~ -o) with the meanings: 1) "size", 2) "definite / indefinite quantity", 3) "quality / characteristics / assessment" (if the form of expression is interpreted using the vowel *o, which is traced in the Proto-Altaic, the consonant *w – in the Proto-Indo-European, *l – in the Proto-Indo-European and Proto-Altaic; then the form of content is interpreted based on the Proto-Indo-European 1) "definite / indefinite quantity", 2) "action" and Proto-Altaic 1) "size", 2) "definite / indefinite quantity").

The data of the Indo-European and Altaic language families made it possible to identify the following degrees of language relationship taking into account the proto-language forms at the level of every language group and etymon – at every language family. Thus, within <u>the Indo-European language family</u>, the following degrees of language relationship were registered: 1) ***the trivial degree*** is established between the Proto-Indo-European and Proto-Slavic, the reflexes of which are observed in the words of the Slavic language group; the three phonemic model CVC- with the same sum of 3 phonological correspondences in the form of expression and the meaning "definite / indefinite quantity" in the form of content; 2) ***the significant degree*** is established among the Proto-Indo-European and Proto-Tocharian, Ancient Greek, Proto-Slavic, the reflexes of which are observed in the words the Tocharian, Slavic language groups, and also the Greek language; the three phonemic model CVC- with the same sum of 2 phonological correspondences (in the form of expression and

the first meaning "definite / indefinite quantity" in the form of content among the Proto-Indo-European, Proto-Tocharian, Ancient Greek and Proro-Slavic. Within the Altaic language family, the following degrees of language relationship were registered: 1) ***the trivial degree*** is established between the Proto-Altaic and Proto-Turkic, the reflexes of which are observed in the words of the Turkic language groups; the three phonemic model CVC- with the same sum of 3 phonological correspondences in the form of expression and the meaning "size" in the form of content; 2) ***the significant degree*** is established between the Proto-Altaic and Tungus-Manchu, the reflexes of which are observed in the words of the Tungus-Manchu language groups; the three phonemic model CVC- with the same sum of 2 phonological correspondences in the form of expression, and the third meaning "quality / characteristic / assessment" in the form of content between the Proto-Altaic and Tungus-Manchu; 3) ***the distant degree*** is established among the Proto-Altaic and Proto-Mongol, Proto-Korean with a separate meaning "length / the end of an action", the reflexes of which are observed in the words of the Mongol language group, the Korean language; the two phonemic model CVC- with the same sum of 2 phonological correspondences in the form of expression and the meaning "definite / indefinite quantity" in the form of content.

***References***


Benfey, Th. (1869). *Geschichte der Sprachwissenschaft und orientalischen Philologie in Deutschland* [History of Linguistics and Oriental Philology in Germany]. Munchen.

Bomhard, A. R. (1995). *Indo-European and the Nostratic Hypothesis: History of Research, Current Trends, and Future Prospects*. Boston, Massachusetts. USA. 82.

Bomhard, A. R. (2015). *A Comprehensive Introduction to Nostratic Comparative Linguistics (With Special Reference To Indo-European)*. 2d Rev., Corr., and Expand. Ed. Charleston, SC. 2258.

Bromage, T. O., Schrenk, F., Zonneveld, F. (1995). Paleoanthropology of the Malawi Rift: an early hominid mandible from the Chiwondo Beds, northern Malawi. *J. Hum. Evol.* 28. 71–108.

Burlak, S., Starostin, S. (2005). *Sravnitelno-istoricheskoye yazykoznaniye* [Comparative-historical linguistics. M. : Akademiya. 432.

Curtius, G. (1862). *Philologie und Sprachwissenschaft* [Philology and Linguistics]. Leipzig.

Curtius, G. (1867). *Zur Chronologie der Indogermanischen Sprachforschung* [On the chronology of Indo-European language research]. Leipzig.

Dietz, Fr. (1836–1845) *Grammatik der romanischen Sprachen* [Grammar of Romance languages]. Bonn. Bd. I–III.

Dolgopolsky, A. (1998). *The Nostratic Macrofamily & Linguistic Paleontology*. McDonald Institute for Archaeological Research. 116.

Dolgopolsky, A. (2008). *Nostratic Dictionary*. Retrieved from http://www.dspace.cam.ac.uk/handle/1810/196512

Gamkrelidze, T. V., Ivanov, Vyach. Vs. (1984). *Indoyevropeyskiy yazyk i indoyevropeytsy. Rekonstruktsiya i istoriko-tipologicheskiy analiz prayazyka i protokultury (v dvukh chastyakh)* [Indo-European language and Indo-Europeans. Reconstruction and historical and typological analysis of proto-language and protoculture (in two parts)]. Tbilisi: Izd-vo Tbilisskogo un-ta. 1332.

Greenberg, J. H. (1957). *Essays in Linguistics*. Chicago: University of Chicago Press. http://psycnet.apa.org/record/1957-06007-000

Heath, J. (2015). The nature and origin of language. *Linguistic Typology*. 19. 3. 463–468.

Heeringa, W, Wet, F. de, Huyssteen, G. B. van (2015). Afrikaans and Dutch as closely-related languages: A comparison to West Germanic languages and Dutch dialects. *Stellenbosch Papers In Linguistics Plus-Spil Plus.* 47. 1–18. Retrieved from https://doi.org/10.5842/47-0-649

Illich-Svitych, V. M. (1971). Opyt sravneniya nostraticheskikh yazykov (semito-khamitskiy, kartvelskiy, indoyevropeyskiy, ural'skiy, dravidiyskiy, altayskiy) [Experience on comparison nostratic languages (Semito-Hamitic, Kartvelian, Indo-European, Ural, Dravidian, Altaic)]. *Vvedeniye. Sravnitelnyy slovar (V–K)*. M. III–IV.

Jacques, G. (2017). A reconstruction of Proto-Kiranti verb roots. *Folia Linguistica*. 51. 177–215. Retrieved from https://doi.org/10.1515/flih-2017-0007

Jucquois, G. (1996). Macrocomparisons in genetic linguistics – Observations concerning Nostratic. *Linguistique*. 32. 2. 149–157.

*Kartoteka Etimologicheskogo slovarya slavyanskikh yazykov. Lingvisticheskiye istochniki: fondy instituta russkogo yazyka* [Card index of the Etymological dictionary of the Slavic languages. Linguistic sources: the foundations of the Institute of Russian Language] (1967). pod red. S. I. Kotkova, A. I Sumkinoy. M. : Nauka. 139.

Klimov, G. A. (1988). Rekonstruktsiya i diakhronicheskaya interpretatsiya v komparativistike [Reconstruction and diachronic interpretation in Comparative Linguistics]. *Voprosy yazykoznaniya*. M. 3. 9–16.

Korolyova, A. V. (2018). Reconstruction of Early Migration Routes of Homo Populations. *Logos*. Klaipeda. 94. 159–166.

Leakey, L. S. (1964). *A New Species of The Genus Homo From Olduvai Gorge*. B.: Nature. 202. 4927. 7–9.

Makovskiy, M. M. (1982). *Angliyskiye sotsial'nyye dialekty (ontologiya, struktura,, etimologiya)* [English social dialects (ontology, structure, etymology)]. M. : Vysshaya shkola. 135.

Melnychuk, A. S. (1991). O vseobshchem rodstve yazykov mira [On the universal relationship of the languages of the world]. *Voprosy yazykoznaniya*. 2–3.

Menges, Kh. (1989). Nostratic Linguistics – the 1st International-Symposium. *Anthropos*. 84. 4–6. 569–574.

Mosenkis, Yu. L. (2007). Obshchemirovoy prayazyk: teoreticheskiye osnovaniya rekonstruktsii [World-wide proto-language: theoretical fundamentals of reconstruction]. *Proiskhozhdeniye yazyka i kultury: drevnyaya istoriya chelovechestva*. 1, 2. 5–9.

Neroznak, V. P. (1988). Prayazyk: rekonstrukt ili realnost? [Proto-Language: Reconstruction or Reality?]. *Sravnitelno-istoricheskoye izucheniye yazykov raznykh semey. Teoriya lingvisticheskoy rekonstruktsii*. M. 26-43.

Pedersen, H. (1903) Türkische Lautgesetze. *Zeitschrift der Deutschen Morgenländischen*. Gesellschaft. 57. 535–561.

Pott, A. F. (1844–1845) Die Zigeuner in Europa und Asien. Ethnographisch-linguistische Untersuchung, vornehmlich ihrer Herkunft und Sprache, nach gedruckten und ungedruckten [The gypsies in Europe and Asia. Ethnographic-linguistic examination, mainly of their origin and language, printed and unprinted]. *Quellen*. Halle. Bd. 1–2.

Pott, A. F. (1856). Die Ungleichheit menschlicher Rassen, haupsachlich vom sprachwissenschaftlichen Standpunkte, unter besonderer Berticksichligung von des Grafen von Gobineau gleichnamigen [The inequality of human races, chiefly from the linguistic point of view, under the special insistence of the Count of Gobineau of the same name] *Werke*. Lemgo; Deltmold.

Starostin, S. A. (1989). Sravnitelno-istoricheskoye yazykoznaniye i leksikostatistika [Comparative-historical linguistics and lexicostatistics]. *Lingvisticheskaya rekonstruktsiya i drevneyshaya istoriya Vostoka: materialy k diskussiyam mezhdunarodnoy konferentsii*. M. 1. 3–39.

Starostin, S. A. (1996). Word-Final Resonants in Sino-Caucasian. *Journal of Chinese Linguistics*. 24. 2. 281–311.

Starostin, S. A. (1998–2005) *The Tower of Babel.* http://starling.rinet.ru/

Szemerényi, O. (1980). *Vvedeniye v sravnitelnoye yazykoznaniye* [Introduction to comparative linguistics]. M. 13.

Tamariz, M. (2017). Experimental Studies on the Cultural Evolution of Language. *Annual Review of Linguistics*. 3. 389–407. Retrieved from https://doi.org/10.1146/annurev-linguistics-011516-033807

Tkachenko, O. B. (2007). *Issledovaniya po meryanskomu yazyku* [Studies on the Merian language]. Kostroma: Infopres. 352.

Tobias, P. V. (1991). The skulls, endocasts and teeth of Homo habilis. *Olduvai Gorge*. Cambridge. 4. 1–921.

Versloot, A. P. (2017). Proto-Germanic ai in North and West Germanic. *Folia Linguistica*. 51. 281-324. Retrieved from https://doi.org/10.1515/flih-2017-0010

Vovin, A. (2002). Building a 'bum-pa' for Sino-Caucasian – A reply to Sergei Starostin's reply. *Journal of Chinese Linguistics*. 30. 1. 154–171.

Yakhontov, S. Ye. (1991). Prarodina nostraticheskikh yazykov [The ancestral home of the Nostratic languages]. *Slavistika. Indoyevropeistika. Nostratika: k 60-letiyu so dnya rozhdeniya V. A. Dybo*. M. 13–17.

Zywiczynski, P., Gontier, N., Wacewicz, S. (2017). The evolution of (proto-)language: Focus on mechanisms. *Language Sciences*. 63. 1–11. Retrieved from https://doi.org/10.1016/j.langsci.2017.06.004

**Бібліографічний опис:**

Капранов, Я. В. (2018). Діахронічна інтерпретація ностратичного етимона *wol[a] на основі праіндоєвропейської *(e)wel- (Gr hw- / ew-) і праалтайської *ulu (~ -o) форм (за версією С. А. Старостіна). *Науковий часопис Національного педагогічного університету імені М. П. Драгоманова. Серія 9 Сучасні тенденції розвитку мов*. К. Вип. 17. С. 68–80. DOI: https://doi.org/10.31392/NPU-nc.series9.2018.17.06

***Анотація***

*У статті представлено діахронічну інтерпретацію ностратичного етимона *wol[a], верифікованого С. А. Старостіним на основі праіндоєвропейської *(e)wel- (Gr hw- / ew-) і праалтайської *ulu (~ -o) форм. Ці матеріали було взято для аналізу з Глобальної лексикостатистичної бази даних "Вавилонская башня", яка є міжнародним Інтернет-проектом. Уточнено поняття етимона загалом і ностратичного етимона зокрема, під яким розуміється фономорфологічний і семантичний комплекс, установлений на основі реконструйованих етимонів на рівні кожної мовної сім'ї.*

*Продемонстровано, як за допомогою порівняльно-історичного методу етимолог-макрокомпаративіст виконав зовнішню реконструкцію праіндоєвропейського етимона *(e)wel- (Gr hw- / ew-) зі значенням "great number; to heap" на основі внутрішньої реконструкції пратохарського *w'ältse; давньогрецьких *ḗlomai̯ (ēlómeno-, ēlésthō), *wáli-; праслов'янських *velьmi, -ma; *velьjь, *velīkъ; *vālъ, *vālovъ, *vālĭtī; прабалтійського *wal-ī̂- етимонів, а також зовнішню реконструкцію праалтайського етимона *ulu (~ -o) зі значенням англ. "big, many; good", що відбувалося на основі внутрішньої реконструкції пратюркського *ulug; прамонгольського *olon; пратунгусоманьчьжурського *ule-; пракорейського *ōr- етимонів. Прокоментовано процедурні операції С. А. Старостіна, виконані ним на основі методу діахронічної інтерпретації, який дав змогу припустити, що реконструйовані форми прамовних етимонів на рівні мовної сім'ї сягають ностратичного етимона *wol[a]. Це дало змогу встановити й обґрунтувати ступені мовного споріднення між реконструйованими етимонами двох мовних сімей та ностратичним етимоном: в межах індоєвропейської мовної сім'ї: тривіальний – між праіндоєвропейським і праслов'янським етимонами; помітний – між праіндоєвропейським і пратохарським, давньогрецьким, праслов'янськими, прабалтійським; в межах алтайської мовної сім'ї: тривіальний – між праалтайським і пратюркським етимонами; помітний – між праалтайським і пратунгусоманьчьжурським етимонами; далекий – між праалтайським і прамонгольським, пракорейським етимоном.*

***Ключові слова**: ностратичний етимон, праіндоєвропейська і праалтайська форми, порівняльно-історичний метод, метод діахронічної інтерпретації, ступені мовного споріднення.*

**DOI:** https://doi.org/10.31392/NPU-nc.series9.2018.17.07
**UDC:** 801.82:82-92:81'372

**Olena M. Kolomiiets**
Khmelnitskyi Cooperative Trade and Economic Institute,
Khmelnitskyi, Ukraine

# FIGURATIVE AND STYLISTIC ELEMENTS RECONSTRUCTION OF NEWSPAPER SYNOPTIC TEXTS (Based on the English, German, Polish and Ukrainian languages)

**Bibliographic Description:**

Kolomiiets, O. M. (2018). Figurative and Stylistic Elements Reconstruction of Newspaper Synoptic Texts (Based on the English, German, Polish and Ukrainian Languages). *Scientific Journal of National Pedagogical Dragomanov University. Series 9. Current Trends in Language Development*. K. 17. 81–98. DOI: https://doi.org/10.31392 /NPU-nc.series9.2018.17.07

***Abstarct***

*The article discovered the new methodological possibility of reconstruction, which in cognitive linguistics began to be applied to other, broader tasks associated with the need to restore structures of consciousness, which include newspaper synoptic texts (hereinafter – NST) as mental formations. Active decoding of innersemantic elements of NST revealed stylistic devices based on the interaction of 1) the vocabulary and contextual meanings (metaphor, metonymy, irony), 2) primary and derivative meanings (zeugma, pun), 3) the logical and emotional meanings (epithet, oxymoron), 4) logical and nominative meanings (antonomasia), as well as the one 5) that provide additional characteristics of the object of description (hyperbole, comparison).*

*It was determined that the primary means of NST based on the interaction of vocabulary and contextual meanings is metaphor and during the process of reconstruction it became possible to divide it into four types: nominative, figured, cognitive and generalized. Three models of determined analogical transformation from the name of the weather phenomena to the result of the name, from the name of action to the action object name, from the name of the piece of weather phenomena to the name of a weather phenomena as well as two directions of semantic reconsideration of the phenomena associated with weather forecasting which are the violation of the ritual and habits of everyday life and the representation of the obscurity of the attitude to the weather phenomena were defined.*

*The article proves that less productive NST images in the studied languages are those that are based on the interaction of basic and derivative meanings and logical and emotional meanings. Among the most common means of providing additional characteristics to description of hyperbole is revealed which aim is to*

*express exaggerated attitude to weather forecast scenario and comparison to appeal to the readers' experience and memory, which helps them to identify the information provided by the author.*

***Keywords:*** *reconstruction, newspaper synoptic text, figurative and stylistic element, stylistic device, innersemantic elements.*

***1. Introduction.***

Modern anthropocentric linguistics returns to the study of those scientific phenomena, which origins reach comparative and historical paradigm. First of all, the notion of reconstruction belongs to such scientific descriptions which in the classical linguistic paradigm (O. Kh. Vostokov, F. Bopp, J. Grimm, R. Rask, etc.) were reduced to the procedural technique of the comparative and historical method to restore the Proto-Indo-European etymon (R. F. Adrados, R. V. Boldyrev, L. A. Bulakhovskyi, V. A. Dibo, A. B. Dolgopolsky, A. F. Zhuravlev, V. V. Martynov, O. S. Melnychuk, S. L. Nikolayev, M. I. Tolstoy, V. M. Toporov, O. M. Trubachyov, E. Benveniste, A. Meillet). Nowadays, the term "reconstruction" (L. P. Dronova, A. V. Korolyova, M. O. Shutova, etc.) is understood as the consistent restoration of processes, mechanisms and stages of more complex forms construction (cognitive, semantic, structural, etc.) in particular structures of human consciousness, objectified as units of lexical and semantic system, and of higher-level entities represented by text structures (O. V. Delva, O. O. Cherkhava, D. Crystal, A. Falileyev, G. Hudson, K. MacCone, P. Sims-Williams).

The phenomenon of reconstruction has become an important theoretical and methodological basis of modern linguistic research (G. A. Klimov, G. Bonfante, J. Kurylovich, K. Koerner, H. M. Hoenigswald) connected with the renewed problem study of the language and consciousness connection (A. V. Korolyova, L. P. Dronova, M. O. Shutova, S. Sh. Aytov, P. V. Kretov, O. I. Kretova), language and culture connection (Yu. D. Apresyan, V. Z. Demyankov, V. V. Zhayvoronok, O. D. Krivonosov, Yu. M. Lotman, J. A. Sternin, A. Wierzbicka); world language picture reproduction (I. O. Golubovsky, G. V. Kolshansky, G. V. Mezhzerina, Zh. P. Sokolovsky, O. D. Shmelev), national conceptual spheres composition (N. D. Arutyunova, S. G. Vorkachov, V. I. Karasik, V. I. Kononenko, V. V. Krasny, G. M. Yavorskaya) and others.

The classical understanding of reconstruction is reduced to its interpretation as a procedure of comparative historical method, which aims are to establish an archetype based on the position that sounds' changes in related languages have distinct natural character that is why the word roots and inflections are stable for thousands of years (the founders of comparative historical method the procedure of which is reconstruction were German linguists F. Bopp and J. Grimm).

Comparative historical method remains the most important tool for establishing languages affinity and knowledge of their history, but with the development of linguistic science, the term "reconstruction" began to be interpreted more broadly than just the procedure of comparative and historical method and became an independent method of cognitive comparative linguistics that involves restoring structures of consciousness which are organized as matrices (a founder of cognitive comparative linguistics is A. V. Korolyova), and is the foundation of modern linguistic research. In particular A. V. Korolyova said that today there is a tendency to evolve the term of "reconstruction" – from a narrow understanding of the classical Indo-European studies as the reconstruction of ancient language forms and states to the wide sense – as theoretical and methodological problem of studying the original structures (mythological) and modern consciousness based on the theory of categorization, mental theory, cognitive modeling etc. The linguist notes that the main task of cognitive comparative linguistics is the reconstruction of internal human

cognitive structure in dynamics, where man is regarded as information processing system (consisting of independent components (conceptual spheres)), which is able to correlate information from various linguistic conceptual spheres (Korolyova 2014: 95). Some conceptual spheres are interpreted as varieties of complex unities that intersect and concentrate the experience of their carrier based on both ancient and modern consciousness with the help of language verbalization. Of course, the correlation between the bonds of ancient and modern language consciousness relics brings us back to such phenomena as diachrony and synchrony in their projections for the linguistic structures of conscious organization, and on the diachronic approach of their studies.

Studying the evolution of the concept of reconstruction O. O. Cherkhava notes that the concept of "linguistic reconstruction" has intergraded from reproducing the original roots of words in the narrowest sense (including methodological procedure of sound and morphological systems of languages comparison, grammatical and syntactical correspondences) to the theoretical and semantic laws of the state of similarity genetically related languages, cognitive human processes procedures to the modern large-scale theoretical and methodological approach to the interpretation of the philosophical meaning of entity (Cherkhava 2015: 157).

Reconstruction is the essence of modern comparative linguistic studies that can detect common and different features in languages, representing the concept of different world images of language carriers. However, despite numerous studies within these issues, many problems still remain unsolved, including: text (context) status for implementing semantic reconstruction for interpreting the author's uttering through the reconstruction of his / her intention.

Among the number of modern approaches (anthropocentric, discursive, cognitive, contextual), with the help of which the interpretation of the term "reconstruction" was carried out, special attention deserves discursive approach, because, according to Yu. Lotman study, all the surrounding reality can be described as text, because people through the interaction with whatsoever can make meanings of themselves, their society and express their attitude to it (Lotman 1996: 12). The basis of this approach is to understand the idea of reconstruction as a way of representation and interpretation of reality through its objectification in the light of the text as a sign of culture. Under these conditions, the text (its structure, semantic, syntax) undoubtedly becomes a product and the phenomenon of the society, a reflection of its attitude and outlook. Thus the text serves as a three-pronged sign of complex nature: cultural, mental and verbal.

The universal approach to the definition of the concept was offered by M. P. Brandes, who related structure with the form and as a system of methods, techniques, expression, representation, transformation and operation contents; however, she outlined three aspects: the aspect of outer language form, aspect of feasibility of external forms and information semantic and symbolic aspect. The aspect of outer language form is linked to the speech objectivation of the functional content through the use of linguistic resources (Brandes 2004: 123). Aspect of external shape feasibility embodies the functions of appointment of the text objective content, which is implemented in the form of costruction matter. Informational semantic and symbolic aspect of forms is connected with cultural and historical context.

Emphasizing the text importance for implementing semantic reconstruction linguists note that the text is needed for semantic reconstruction, because only careful study of the text (context) within its fragments, including unit selected for analysis, is necessary and sufficient to determine the value of the unit, which is consistent for the whole meaning of the text, where the studied form is expressed in a variety of use, that can explain and motivate convergence / divergence of the meanings. Implementing the procedure of semantic

reconstruction, one should remember that even selected meaning of the word from the context is not the only one; other meanings of the word selected exist potentially.

The evolution of the term "reconstruction", which has undergone a long stage of formation from the original forms to text constructs in cognitive linguistics, can be divided into three stages.

At ***the first stage*** (F. Bopp, J. Grimm, R. Rask, O. Kh. Vostokov), reconstruction was considered as "the reproduction of the language preforms"; "the formula of correspondence and the real form of language and the purpose of comparison" (F. de Saussur) (Kochergan 2006: 214–215). At the end of the nineteenth and early twentieth centuries, linguists (K. Brugman, B. Delbruck, G. Ostkhov, A. Leshkin, F. Fortunatov, F. Schlegel) linked the reconstruction with the reproduction of the word phonetic image, since the basis of the word phonetic changes are laws that do not know the exceptions. The undoubted achievement of the first stage was the doctrine of language interpretation as a result of psychophysical activity (S. Bugge, M. Breal, K. Werner, V. Thomsen, B. Whitney). According to scientists, speech has two aspects: mental and physical. Therefore, to study the role of mental mechanisms in sound changes, they used the achievements of psychology.

***The second stage*** is characterized by the transition from the word reconstruction to more complex formation reconstruction represented by canonical and historical texts (K. Jackson, C. Menges, O. Shakhmatov, I. Williams). The first attempts to carry out text reconstruction were characterized by indistinctness of linguistic approaches, uncertainty of the reconstruction procedure, but the undoubted achievement was that linguists attempted to link the results of reconstruction with the history and culture.

Linguist O. Shakhmatov, who first attempted to reconstruct the text "Povist' mynulykh lit", commenting on the purpose of the reconstruction claimed: "Linguistic issues during reconstruction should not be in the foreground" (Shakhmatov URL: http://www.studmed.ru/shahmatov-aa-povest-vremennyh[...]). Having analyzed the writing style, the scientist paid more attention to the historical constituent, and connection between language and culture.

Another striking example of text reconstruction was offered by linguists who not only reproduced the canonical text "The Word of the Ihor's Regiment", but also gave authors' interpretation of the lexical composition (some geographical names), the foreign words explanation as the elements of oriental culture (Menhes URL: http://weblib.pp.ua /vostochnyie-elementyi-slove-polku-igoreve.html).

An important aspect of textual reconstruction in the study of intercultural relations was European scholars' achievement based on the results of the Anglo-Saxon heroic epic "Beowulf" reconstruction. Linguist R. Williams recreated the Finnic episode and interpreted it through the system of signs and meanings (Williams 1924: 116–156).

In the well-known book "Language and History in Early Britain" (1953) K. Jackson reconstructed the Neo-Briton language semantics (Jackson 1953: 110–134), and tried to explain it, using historical information about culture and people's life.

Thus, linguists were united in their attempt not only to reconstruct the lexical, morphological, syntactic systems of the original, but also to study the text structure, its semantics and to give their own interpretation to speech phenomena outlining the history reflection and people culture through a series of semantic elements.

***The third stage*** (V. Meyserskyi, B. O. Parakhonskyi, G. Bloom, L. Gray, W. Royder) showed the rethinking of the text reconstruction purpose and procedure. Yu. Lotman, who pointed out that "the whole surrounding reality can be described as text because people in the process of interacting with anything can produce senses about themselves, their society and express their attitude towards them" (Lotman 1996: 11).

A modern view of the reconstruction of the ancient epic was offered by G. Bloom in his work "Beowulf. Interpretation", in which the reconstruction was understood by the scientist through the prism of studying the epic structure, its cyclicality and temporality, mythological and historical components, Christian and pagan elements semantics, and also irony was emphasized as the main stylistic element (Bloom URL: books.google.com.ua/books?id=9Ks8nj3BGEQC&pg=PA32&lpg=PA32&dq=Bloom+H.+ Beowulf.+Interpretation&source).

Text fragments reconstruction is directly related to the reconstruction of its composite elements. The study of the text structure as a plurality of meanings is reflected in the works of A. P. Zagnitko and T. I. Levchenko. Authors define the text as a plurality of meanings, a set of subjects, institutions and realities.

It is important to take into account the structural text elements as well as the ability to transfer meanings, metaphors, associations, etc.

According to the scientists' research, reconstruction is an important methodological tool for modern linguistic studies. Commenting on the importance of reconstruction usage, O. M. Trubachyov predicted the further development of this phenomenon and its output beyond the classical understanding as a procedural technique of comparative and historical method. According to the scientist, reconstruction is a humanity phenomenon and acts as a source of knowledge of the ancient spiritual and material culture (Trubachyov 1988: 197–222).

The usage of the reconstruction method in the renewed sense enables to deepen the study of intrasemantic elements, that allows focusing on the disclosure of the ancient and modern language consciousness connection, reflected in the images of mass media texts in general and newspaper synoptic texts (hereinafter – NST) in particular.

In a new way the text is conceived in conditions where the borders between sciences are erased and the problem of disclosing a semiotic and informative approach to its definition and status appears. At the heart of this approach there is the idea that the culture is a way of representing and interpreting reality by its objectification throughout the text. According to Yu. Lotman, culture is conceived as a complex organized sign mechanism, which ensures the existence of a particular collective personality of a certain group of people, who possess some intransitive instinct, common memory, unity of behavior, unity of the surrounding world modeling and unity of attitude towards it (Lotman 1996: 11–22). According to this statement, text undoubtedly acts as a cultural sign.

***2. Methods of the Analysis of Linguistic Material.***

Among the methods and methods of the study is the method of cognitive and linguistic reconstruction, which was used at various levels of the symbolic organization of newspaper synoptic texts. The aim was to represent the text as macrosign of cultural nature and reveal characteristics on the basis of the coding of historically predetermined and fixed meanings in the mind. Comparative and typological method was used for the choice of *tertium comparationis*, comparative interpretation of linguistic material and the establishment of common and different semantic elements of newspaper synoptic texts; contextual and interpretation method was used to establish the status of newspaper synoptic text, its significance in the social and cultural context.

***3. Newspaper Synoptic Text Content Reconstruction.***

The notion of the "text" can be defined in different ways. T. M. Nikolayeva offers such definitions: 1) text – is the linked sequence, completed and issued correctly; 2) the sequence of statements, which belong to one participant of communication; 3) piece of writing in the form of language creation (Nykolayeva 2000: 25). The following definitions do not divide the potential and realization levels, incorrectly link the text only with one participant of

communication, do not take into account the level of informational contents, correlate the text only with the sequence of statements, secondary means of the information transmission.

One of the most controversial in linguistic plan is the newspaper synoptic text, because in its content and form the intergenerational experience is reflected concerning weather issues, that is being tried to explain through scientific astronomical, geographical, and climatic factors in modern synoptic forecasts. Such text form and content reconstruction will contribute to the disclosure of those national and cultural symbols which are covered under the new rules for presenting weather forecasts in various ethnic cultures.

The newspaper synoptic text appears in the middle of the XIX century. British researcher R. A. Martin notes that along with newspaper weather forecast there is the so-called "weather journalism", which purpose is not only the weather prediction, but the caution against possible natural disasters and the fixation of atmospheric phenomena, and also the formation of a value relation to the text itself, distinguishing its key characters (Sterling 2009). The appearance of a telegraph in 1844 and the flourishing of meteorology as a science gave an impulse to the whole section of the weather news emergence. Francis Bufort and Robert Fitssraw, the British hydrographers, contributed to the emergence of weather forecasting, which was reflected in the newspaper synoptic text.

Thus, when we define the term "the newspaper synoptic message", we pay attention to its cultural nature as well as information transmission, the attitude formation, and the key features. Due to the mentioned facts above, we define the newspaper synoptic text as a structural macrosign of cultural, mental and linguistic nature, created by representatives of media-media practices (G. Ya. Solganik), native language speakers, necessitates the implementation of a comprehensive reconstruction of its innersemantic elements. According to this fact, the study of innersemantic elements remains one of the key problems of modern cognitive linguistics.

Synoptic text is the author's text, where the personal modality dominates, which is a logical step in the attitudes formation in writing process. The newspaper synoptic texts' modality is manifested through a series of linguistic tools used in the texts of journalistic style, mainly stylistic, lexical and idiomatic. The integrated usage of these techniques, on the one hand, allows the author to make a value judgment to give information, but on the other, creates a reader's attitude to the author's language.

The analyzed techniques studied through the prism of reconstruction would help to realize that the text is a reflection of the attitude traditions to the weather and the use of stylistic devices only enhance the emotional perception of weather conditions, the intention of the author in this case is to create a positive attitude to weather conditions.

***4. Aim of the Innersemantic Element Reconstruction.***

The newspaper synoptic text is the specific reflection of people culture, their outlook and attitude to the surrounding world. Different language level units take part in their formation according to their interdependence and interaction. Reconstruction of figurative and stylistic elements on the basis of the interaction of dictionary and contextual meanings presupposes the interpretation of content and semantic features, allows decoding the ancient NST images, compiled over the centuries and actual nowadays.

The reconstruction of the innersemantic elements of the NST is aimed at identifying the stable, meaningful characteristics used to codify the historically determined and consolidated meanings in the mind, reflected in the practice of weather forecasting. The procedure for determining the meanings fixed in the consciousness involves a clear algorithm of actions that, in addition to the reconstruction of the images and meanings of the NST, is aimed at the reconstruction of the ancient vocabulary and the definition of the values that were fixed therein. Emphasizing the importance of the reconstruction of semantic elements, O. Sorokina

observes that semantic reconstruction involves the vocabulary study according to its disciples and thematic groups, as well as the definition of the place of the vocabulary in text (context) (Sorokina URL: http://cyberleninka.ru/article/n/k-utochneniyu-soderzhaniya).

Considering text as a sign of mental nature (N. D. Arutyunova, G. A. Zolotova, O. O. Selivanova, H. Bloom, M. Halliday, W. Roider), it is easy to distinguish the main approaches represented in numerous works by scientists: according to M. A. K. Halliday theory, the text is a semantic sign and can not be defined as a certain organization, since it represents the actualization of the potential; according to A. Graymas research, the text is divided into statements, but is not their sum; according to P. Giro, the text is a collection of elements, which in system bonds acquire a qualitatively new semantic effect (Selivanova 1999: 27); according to L. A. Lisichenko and L. G. Savchenko, figurative and stylistic elements belong to the semantic elements and form a "semantic author's field". Thus, the text semantics is manifested through the system of introsemic (first of all, figurative and stylistic) elements, which in the system consists of the mental reality modeling, which is the product of author's cognition.

In view of this, the purpose of the article is to carry out the reconstruction of figurative and stylistic elements and the interpretation of the components of their semantic content.

Achievement of the set goal involves solving the following objectives:

– to perform reconstruction of figurative and stylistic elements and decode the established images based on the results;

– to study the content and semantic features of figurative and stylistic elements of the NST.

***5. Figurative and Stylistic Elements Classification.***

Figurative and stylistic elements of the NST differentiate according to the classification of the well-known scholar-linguist I. R. Halperin, who distinguished:

1. Stylistic elements based on the interaction of vocabulary and contextual meaning: 1) metaphor; 2) metonymy, 3) irony.

2. Stylistic elements based on the interaction of logical and emotional meaning: 1) epithet, 2) oxymoron.

3. Stylistic elements that provide additional characteristics of the object of the description: 1) comparison; 2) periphrasis; 3) hyperbole; 4) meiosis (Halperin 1981: 138–176).

***6. Figurative and Stylistic Elements Reconstruction.***

Reconstruction of the elements of first group requires the study of their content and semantic features, which will help to find out and decode the oldest images of the NST, that are products of people consciousness compiled over the ages and still relevant.

The metaphor (from Greek "transfer", "figurative value") is defined as: poetic means consisting in the figurative word usage or phrase based on analogy, similarity or comparison, as well as the word or expression used in this way (SLT: http://www.ukrlib.com.ua); a complex figurative and semantic structure, representing a special way of cognition, carried out by generating images that arise as a result of the interaction of two diverse meanings (LSD: 382); the substitution of the usual figurative expression, semantic universality (VTSUM: 531).

Metaphors, like semantic universals, have features such as interactivity, universality and national specificity.

The processes of metaphorization take place in the field of mental-thinking practice, which deals not with real things and phenomena, but with their reflections in human consciousness. K. Zhol observes that "the emergence of a metaphor in the field of linguistic consciousness is the evidence of phylogenetic and ontogenetic maturity" (Zhol 1984: 111–

112). Metaphors, like semantic universals, have such features as interactivity, universality and national specificity.

Metonymy (from Greek – μετωνυμία – renaming) is interpreted as: a lexical unit which meaning is transferred to the name of another object, associated with the object in the given word by its nature, the direction of semantic derivation (SLT: http://www.ukrlib.com.ua).

The metonymy as a semantic element is characterized by the following features: the inverse and irreversibility of the semantic change (reversal – nonreversible change of value).

The irony (from Greek είρωνεία – craftiness, ridicule, hidden humor) is interpreted as: an artistic trail that expresses the mock-critical attitude to the subject of the image (SLT: http://www.ukrlib.com.ua); means of stylistic interpretation of the category of comic trail, means of emotional and appraisal criticism, conceptual category of text, mental linguocultural approach (Weise 1984: 39–41).

The irony-question (ironical question) as a subcategory of irony is determined by the features of the opposite of the interpretation, the binary character of the semantic change (SLT: http://www.ukrlib.com.ua), appealing to the reader's experience, his memory.

***6.1. Figurative and Stylistic Metaphor Reconstruction***.

Figurative and stylistic reconstruction of a metaphor will allow determining how natural phenomena and weather conditions are reflected in the people's consciousness by means of synoptic text and find out the relation associated with them.

N. D. Arutyunova divides metaphors into the following groups:

1) nominative metaphors that consist of one descriptive value replaced by another and homonymy;

2) figurative metaphors that serve the development of figurative meanings and synonymous means of language;

3) cognitive metaphors that arise as a result of the shift in the predicate words (transfer values) combining and creating polysemias;

4) generalizing metaphors (as the final result of the cognitive metaphor), erasing in the lexical meaning of the word as the boundary between the logical order and stimulate the logical polysemy emergence.

Nominative metafors of the NST are usually represented with terms formed through a figurative rethinking of commonly used lexical units. In the course of the semantic reconstruction of the nominative metaphors of the NST we distinguish two types: on the basis of simple analogies and on the basis of conditional analogies.

Metaphors based on simple analogies of the GTS are mostly often formed by the transformation of one descriptive meaning to another: for example, Eng. "Hand": Storm chaser's first hand view (The Telegraph 2016: 21.11); Ger. "Cape" (cap): heute geschrumpften Schneekappe (Der Tagesspiegel 2013: 10.01); Pol. "Czapka": czapka snezhnaya (Gazeta IE 2006: 3. 03); Ukr. "пояс": кліматичний пояс (Ukrayinska pravda 2010: 26.08).

Metaphors based on the conditional analogies of the NST of the studied languages are formed through the rethinking of terms with the components: warm / cold, liquid / solid, that act as the established characteristics of certain weather phenomena:

1) the component "warm / cold" as the established characteristic of the air mass: Eng. *With the cold air mass expected to be in place, daytime temperatures could hit as low as 37F (3C), with overnight frost and sub-zero temperatures* (The telegraph 2012: 26.01); Ger. *Warme Luftmassen beherrschen deshalb das Bild im Norden in Canada and in Alaska, wyhrend sich in Chicago and und inere Städte im mittleren Westen der derität der derit undefined by Nordpol* (Der Tagesspiegel, 2014: 06.01); Pol. *Na przeważającym obszarze Polski ma być w miarę słonecznie i bez opadów. Co więcej, napłyną do nas ciepłe masy*

*powietrza* (Fakt 2016: 18.11); Ukr. *На Україну насувається тепла повітряна маса* (Ukrayinska pravda 2014: 14.04);

2) the component "warm / cold" as the established characteristic of the atmospheric front: Eng. *Siberian cold front sweeps across Europe, bringing record low temperatures* (The telegraph URL: http://www.telegraph.co.uk); Ger. Am *Montag erreicht eine russische Kaltfront Berlin* (Der Tagesspiegel, 2017: 6.01); Pol. *Przewaga chmur, okresami deszcz od niedzieli do wtorku, to strefy frontów, które dadzą początek chłodniejszej adwekcji północno-zachodniej i północnej.* (Fakt 2016: 30.09); Ukr. *Таку погоду в Україні обумовить холодний атмосферний фронт, що переміщається із заходу на схід* (Ukrayinska pravda 2012: 16.08);

3) the component "strong / light" as an established characteristic of precipitation: Eng. *The wintry conditions claimed their first victim at the weekend as a walker fell more than 650ft after slipping on the "iron-hard" snow in the Cairngorms* (The Telegraph 2009: 01.01); Germ. *Regen und zum Teil kräftige Gewitter bestimmen an diesem Montag das Wetter in Deutschland* (Der Tagesspiegel 2007: 2.07); Pol. *Pierwsze wiosenne burze i lekki deszcz – na południu* (Fakt 2011: 17.02); Ukr. *Напередодні на Житомирщині вирував сильний буревій, у Хмельницькій області випав сильний град* (Ukrayinska pravda 2016: 18.07);

4) the component "long / short" as the established characteristic of the forecasting period: Eng. *British scientists are believed to have developed the world's best long-term weather forecasting model* (Telegraph 2014: 1.04); Ger. *Wetter Deutschland – Wettervorhersage Tag 15* (Der Tagesspiegel URL: http://www.tagesspiegel.de); Pol. *Jak wynika z 16-dniowej prognozy pogody* (Fakt 2016: 2.10); Ukr. *Довгостроковий прогноз погоди від науковців-метеорологів* (Dovhostrokovyy prohnoz pohody vid naukovtsiv-meteorolohiv URL: http://ukr.media).

A result of figurative metaphors' semantic reconstruction is determined by the fact that the metaphor in this case is a resource to the signs of living things that are applied during the phenomenon of weather development: Eng. *Rain was a frequent visitor that season* (The telegraph URL: http://www.telegraph.co.uk); Ger. *Regen war ein häufiger Besucher im Winter* (80); Pol. *Wiosna dziewczyna pojawi wkrótce* (Aargauer zeitung 2016: 11.08); Ukr. *Красуня-зима прийде до нас в гості раніше, ніж ми цього чекаємо* (Syohodni URL: http://www.segodnya.ua).

The cognitive metaphor semantic reconstruction of the NST allows distinguishing the following three types: metaphors based on transference of human features on a weather phenomenon, metaphors based on the transference of synesthesia phenomena, metaphors based on the time signs transference.

The NST metaphors on the basis of the actions transfer "from the creatures to the weather changes", are realized through verbs and verbal forms with the meaning of motion, demonstration, and speech:

1) through the verbs with the meaning "to go, to come": Eng.: *More showers to come today* (The telegraph 2017: 7.02); Ger. *Regen geht der Kirsche unter die Haut* (Der Tagespiegel 2012: 21.07); Pol. *Rok później zima urzędowała bardzo długo na wschodzie Polski* (Aargauer zeitung 2016: 11.08); Ukr. *На Андрія в Україну прийдуть морози* (Ukrayinska pravda 2009: 12.12);

2) through the verbs with the meaning "to travel, to reach": Eng. *As the cloud traveled across the African coast, the airflow was veered southherly, carrying the dust northward above Portugal, northern Spain and the Biscay Bay, before it eventually reached the southern Britain on Wednesday afternoon* (Dovhostrokovyy prohnoz pohody vid naukovtsiv-meteorolohiv URL: http://ukr.media); Ger. *Wolken ziehen über die Stadt, der Regen bleibt*

*aus* (Der Tagesspiegel 2007: 12.11); Ukr. *У штаті Раджастан температура сягнула позначки 51 градус із плюсом за Цельсієм* (Dovhostrokovyy prohnoz pohody vid naukovtsiv-meteorolohiv URL: http://ukr.media);

3) through the verbs with the meaning "to fall": Eng. *In fact, much of the rain that falls in the UK starts off as snow, even in high summer* (The Telegraph 2014: 3.04); Ger. *Mittags ziehen erste Wolken auf, aus denen dann, vielleicht, ein paar Flöckchen fallen könnten* (Der Tagesspiegel 1999: 16.11); Pol. *W środę rano po raz pierwszy tej jesieni w Warszawie zaczął padać śnieg* (Fakt 2016: 9.11); Ukr. *Під кінець тижня сніг випаде і в Києві* (Ukrayinska pravda 2016: 10.10);

4) through the verbs and verbal forms with the meaning "to bring": Eng. *Storm Angus is bringing wet weather elsewhere with the winds expected to be strengthened in the coming hours* (The Telegraph 2016: 21.11); Ger. *Die Wärme führt dazu, dass die Niederschläge mehr Regen als Schnee bringen und die die Schneedecke früher abschmilzt* (Der Tagesspiegel 2015: 3.03); Pol. *O ile temperatura w nadchodzący weekend utrzyma się jeszcze w przedziale od 4 do 9 stopni C, to od poniedziałku będzie się zdecydowanie obniżać, a przejście przez nasz kraj frontu atmosferycznego przyniesie opady śniegu i śniegu z deszczem* (Fakt 2016: 26.11); Ukr. *Квітень не принесе ніяких неочікуваностей в плані погодних умов* (Sylna Ukrayina. URL: http://sylnaukraina.com.ua);

5) through the verbs and verbal forms with the meaning "to drop / to jump": Eng. *True, there was one short spell, July 4–8, when the temperature climbed above 30 °C over a wide area, and readings of 33.3 °C were logged on July 5 in London and Norfolk* (Coventry Telegraph, URL: http://www.coventrytelegraph.net); Ger. *Klettert das Thermometer auf die 25 Grad oder darüber springen* (Der Tagesspiegel. URL: http://www.tagesspiegel.de); Pol. *Nagły spadek temperatury, czy wręcz załamanie pogody, spowodowane jest połączeniem wyżu panującego nad Polską* (Fakt 2016: 8.08) Ukr. [...] *і настане довгоочікуване літо – температура підскочить до +25 градусів* (Ukrayinska pravda 2016: 18.07);

6) through the verbs with the meaning "to speak, to note, to report": Eng. *The report from Grindelwald remarked [...], The report from La Plange spoke of* [...] (The Sunday Telegraph 2003: 2.03); Ger. *Ski-Club sagte, dass das Wetter* [...] (Der Tagesspiegel. URL: http://www.tagesspiegel.de); Pol. *W naszych prognozach pogody umieszczamy informacje o przedziałach czasowych, których dotyczy wysokość przewidywanych opadów atmosferycznych* (Gazeta IE 2006: 3.03); Ukr. *Як повідомляє Гідрометцентр* (…) (Ukrayinska pravda 2016: 18.07);

7) through the verbs with the meaning "to show, to demonstrate": Eng. *The thermometer has shown 24 °C* [...] (The Sunday Telegraph 2003: 2.03); Ger. *Fast 35 Grad zeigt das Thermometer an* (Der Tagesspiegel 2016: 13.11); Pol. *Temperatura wynosi od minus 9 stopni miejscami na wschodzie do minus 1 stopnia miejscami na zachodzie* (Tvoja pogoda. URL: http://www.Tvoja pogoda.pl); Ukr. *Удень термометр покаже +28* [...] *+30 градусів, місцями до +35 тепла* (Ukrayinska pravda 2012: 16.08).

Often, metaphorical transitions are subjected to nominations of visual and tactile sensations, the usage of which creates vivid dominant images, helping the reader to fully imagine the weather phenomenon:

1) visual sensations: Eng. *Spring days come with dry weather and bright sunshine* (The Telegraph 2011: 07.04); Ger. *Am Mittwoch und Donnerstag ist es in der Nordhälfte überwiegend stark bewölkt, wobei im Norden vereinzelt noch etwas Regen fällt* (Der Tagesspiegel 2015: 9.11); Pol. *We wschodniej i południowej części kraju pokrywa białego puchu miała od 15 do 20 cm, ale zaspy śnieżne przekraczały miejscami pół metra wysokości* (Aargauer zeitung 2016: 11.08); Ukr. *Перший справжній сніг уже ліг на полях Київської*

*та Хмельницької областей, надалі очікується його утворення і на решті території* (The Sunday Telegraph 2003: 2.03).

2) tactile sensations: Eng. *The weather experts said there was "exceptional warmth across the Territory" last year* (Daily Telegraph 2013: 7.11); Ger. *Die Behörden sprechen von einem "ungewöhnlich kalten Wetter"* (Der Tagesspiegel, 2017: 6.01); Pol. *Wszystko przez chłodny front atmosferyczny nasuwający znad Bałtyku* (Fakt 2013: 31.10); Ukr. *Значні морози прийдуть внаслідок уторгнення холодних повітряних мас із північного сходу* (Silski Visti 2014 URL: http://www.silskivisti.kiev.ua/19182/index.php).

The usage of such metaphors in the NST allows the reader to experience the weather forecast scenario in advance, creating the impression of transferring into the future, accompanied by a different emotional background: positive – with expected warming, increasing temperature; negative – with undesirable cooling, lowering the temperature.

The usage of time orientation features to characterize the seasons and the type of change is inherent in the NST metaphor. Such combinations often include an estimation reflected in such semantic universalities as "early" and "late":

1) time marker "early" as the phenomenon of nature, the state of the weather: Eng. *Earliest spring brought daffodils out 4 weeks early* (Coventry Telegraph URL: http://www.coventrytelegraph.net); Ger. *Früher Sommer, schlechte Ernte* (Bild URL: http://worldmags.net/146738–bild–25–august–2016.html); Pol. *Jesień przychodzi wcześnie tego roku!* (Aargauer zeitung 2016: 11.08); Ukr. *Харківський бабак-синоптик пророкує ранню весну* (Ukrayinska pravda 2016: 2.02);

2) temporal marker "late" as the phenomenon of nature, the state of the weather: Eng. *The Met Office can now predict winter weather one year in advance* [...] *and then a transition to cooler, dryer conditions during late winter* (The telegraph 2016: 17.11); Ger. *Denn der Spätherbst beschert uns in seinen letzten Zügen noch in quicken ges Österreich einen sonnigen, milden und vor allem trockenen Start ins Wochenende* (Wolfenbütteler zeitung URL: http://www.wolfenbuetteler-zeitung.de); Pol. *Późna jesień mieni się żółcią i pomarańczem, jednak, gdy zza chmur wyłania się słońce, drzewa wyglądają jakby były pozłacane* (Aargauer zeitung 2016: 11.08); Ukr. *Пізня весна та спекотне літо прийдуть з дощами* (Dovhostrokovyy prohnoz pohody vid naukovtsiv-meteorolohiv URL: http://ukr.media).

The reconstruction of the generalized metaphor of the NST testifies that the generalizing metaphor is the least used stylistic device in the NST of the studied languages. The generalizing metaphor is often transmitted through the following lexical units:

1) "grits" used with the aim of transferring signs of flowingness to the snow form precipitation: English. *snow grits* (The Telegraph 2016: 21.11); Ger. *Schnee Grütze* (Der Tagesspiegel URL: http://www.tagesspiegel.de); Pol. *śniegowa kasza* (Gazeta IE 2006: 3.03); Ukr. *сніжна крупа* (Ukrayinska pravda 2009: 12.12);

2) "snow cover", "blanket" creating a visual image of the earth cover: Eng. *After a drought that lasted for 50 days, the snow cover in some lower French resorts was reduced to ribbons of artificial snow surrounded by rocks and grass.* (The telegraph 2016*:* 22.12); Ger. *Kais Kolumne: Geschlossene Schneedecke Anfang Januar* (Der Tagesspiegel URL: http://www.tagesspiegel.de); Ukr. *Сніжна ковдра вкриє Україну* (Sylna Ukrayina URL: http://sylnaukraina.com.ua);

3) "eye", which creates a vivid and at the same time dangerous image in readers' imagination: Eng. *Eye of the Storm: Inside a Hurricane* (Coventry Telegraph 2015: 17. 04); Ukr. *25 листопада Київ опинився в центрі "ока бурі"* (Silski Visti URL: http://www.silskivisti.kiev.ua/19182/index.php);

4) the "line" most often used in combination with the "snow": Eng. *But springlike temperatures mean even here the snow line is far higher than usual* (The telegraph 2013: 28.11); Ger. *Dort sind die Zusammenhänge so simpel wie erwartet: Je kälter es wird und je tiefer die Schneegrenze sinkt* (Der Tagesspiegel 2013: 10.01); Pol. *Linie śniegu można znaleźć wokół młodych gwiazd* (Aargauer zeitung 2016: 11.08).

Comparison of the NST of English, German, Polish and Ukrainian proves that synoptic texts are rich in metaphorical methods, which allows us to conclude that the diversity of images and transmissions are fixed in the minds of the people in relation to the weather prediction.

***6.2. Figurative and Stylistic Metonomy Reconstruction***.

NST contains a number of elements of methonymic transformation, among which we allocate the following models of transformation:

1) from the name of the weather phenomenon to the name of the action result: Eng. *Some afternoon sun brings warming up to 36 C!* (warming – warming, increasing the temperature of air) (Coventry Telegraph URL: http://www.coventrytelegraph.net/); Ger. *In einer Woche eine starke Erwärmung in 10hpa* (Erwärmung – warming, increase in air temperature) (Der Tagesspiegel 2015: 3.03); Pol. *Zimno pochodzi, pochmurno i deszczowo* (Zimno pochodzi – cold weather, decrease in temperature) (Tvoja pogoda. URL: http://www.Tvoja pogoda.pl); Ukr. *28–29 листопада в Україні очікується похолодання і мокрий сніг* (Syohodni URL: http://www.segodnya.ua);

2) from the name of the action to the name of the object of action: Eng. *The forecast office is predicting the future state of an object or phenomenon based on the analysis of current characteristics* (The telegraph 2016: 17.11); Ukr. *Прогноз погоди на 8 лютого* (Ukrayinska pravda 2016: 2.02);

3) from the name of the part of the weather phenomenon to the name of the whole phenomenon of weather: Eng. *From today onwards, weather will remain unsettled with many resorts receiving welcome falls of new snow over the next few days* (The Sunday Times 2005: 12.12) (Falls – about snowfall); Ger. *Eigentlich müssten sich die Flocken in Tropfen verwandeln* (Der Tagesspiegel 2007: 12.11) (Flocken in Tropfen – snowfall and rain); Pol. *Wydaje nam się, że im większe bąble pojawiające się na ich powierzchni podczas uderzenia kropli, tym dłużej będzie padać* (Tvoja pogoda URL: http://www.Tvojapogoda.pl); Ukr. *А разом із першими дощовими краплями впаде і атмосферний тиск, який дотримається низьких позицій до кінця вихідних* (Coventry Telegraph URL: http://www.coventrytelegraph.net).

The usage of metonymy in the NST is associated with cognitive processes that took place much earlier when, as a result of displaying one linguistic unit in consciousness, another meaning appeared. When creating the GTS, the author operates these linguistic units already in the finished form.

***6.3. Figurative and Stylistic Irony Reconstruction***.

Reconstruction of irony as a figurative and stylistic element allows us to distinguish the following semantic models:

1) violation of the ritual and habitual everyday lifestyle: Eng. *Reports of "white rain" from Hampshire and Sussex were broadcast on the radio around 5 pm, and although the subsequent heavy downpour diluted deposits, the following morning many people noted light colored dust on their cars* (The Sunday Telegraph 2003: 2.03); Pol. *Pierwsze przejaśnienia zaczną się pojawiać w nocy ze środy na czwartek (8/9.02) w zachodniej połowie kraju. Na nic się nam jednak nie zdadzą, bo w nocy słońca nie ujrzymy* (Gazeta IE 2006: 3.03); Ukr. *В 2017 році очікується куди більший рівень морозів, ніж у минулих роках. Синоптики*

*впевнені, що зима 2016-2017 в Україні якщо і буде бити температурні рекорди, то виключно зі знаком мінус* (Prohnoz URL: https://www.obozrevatel.com);

2) the representation of the obscurity of the attitude toward the weather phenomena: Eng. *By this time dust clouds had been overtaken by proper clouds associated with an advancing cold front, and light rain falling from these clouds washed the dust out of the atmosphere, depositing muddy splashes on vehicles and destroying any wash that was left out to dry the brisk southerly breeze* (The telegraph. URL: http://www.telegraph.co.uk); Pol. *W sobotę (30.01) mocno padać będzie na zachodzie i północy kraju, tam też spodziewamy się porywów wiatru do 50–60 km/h* (Aargauer zeitung 2016: 11.08).

Irony substitution is the ironic question by which the author successfully represents a generalized-valued attitude to weather phenomena. Irony questions are mostly often used in the most segmented text part in the title. Using this figurative and stylistic element in the headings is an indication that the author's headings are intended as aesthetic marks bearing the emotional and appraised color of the author's attitude.

The English NST is characterized by ironic questions about weather phenomena and the function of the author's commentary: Will *British weather provide reliable electricity?*, *The big freeze, 2009-10 unprecedented or what?, Winter 2006-2007 – why so warm?* (Coventry Telegraph URL: http://www.coventrytelegraph.net)

For German synoptic texts, the usage of ironic questions is not typical, since they involve the reader's opinion with the author's appreciating attitude, which is inadmissible for the German media, since the reader must form his own opinion based on the offered facts.

For Polish NST, ironic questions are typical for headlines, but they are negatively appreciated by the author's attitude to the weather phenomena, especially the expression of regret due to unfavorable weather conditions: *Oto chmura, która zabrała nam Słońce. Kiedy ustama?* (Gazeta IE 2006: 3.03)

For the Ukrainian NST, as well as for the German ones, it is not indicative to use the ironic question in the headings, but they are used in the text: *Чи дійсно буде вже зима?* (Ukrayinska pravda 2009: 12.12).

***7. Reconstruction of Stylistic Elements Based on the Interaction of Logical and Emotional Meaning.***

Reconstruction of the epithet as the main figurative and stylistic element of the NST revealed the usage of signs of the same semantic plan.

Signs of the same semantic plan, represented by lexical units which denote:

1) colour: Eng. *Widespread hailstone, heavy rain and gusts of wind swept across Britain today, creating dark and gloomy gray skies* (The Sunday Telegraph 2003: 7.03); Ger. *Im Winter zeigt sich Berlin als graue Stadt an der grauen Spree. Und der Himmel? Auch grau* (Der Tagesspiegel URL: http://www.tagesspiegel.de); Pol. *Mróz, ale niewielki. Śnieg, ale z deszczem. Słońca mało, a niebo szare* (Gazeta IE 2006: 2.02).

Negative author's assessment of weather phenomena in the form of rain, mist is often transmitted through the grey colours, which reflect disapproving relation to such rainfall.

2) weight: Eng. *The arrival of 2017 will be a washout for many as heavy rain sweeps across the country after one of the driest decades in a century* (The telegraph. URL: http://www.telegraph.co.uk); Ger. *Nachmittag schwere regen Duschen* (Der Tagesspiegel URL: http://www.tagesspiegel.de); Pol. *Poza tym w marcu będzie mróz nad ranem, a za dnia śnieg z deszczem oraz ciężkie chmury dokładnie przysłaniające słońce* (Gazeta IE 2006: 3.03); Ukr. Згідно з прогнозами гідрометеоцентрів на найближчі 10 днів, в усій Галичині буде мокро, дощі не йтимуть лише кілька днів, але сонце на небі все одно заступатимуть важкі хмари (Syohodni URL: http://www.segodnya.ua);

The image of the cloud in each people group imagination is associated with something heavy, inappropriate, as well as with the absence of the sun rather than with the rain.

3) size: Eng. *However, a little rain is possible later in the afternoon and evening* (The telegraph. URL: http://www.telegraph.co.uk); Ger. *Es gibt kleine örtliche Gewitter* (Der Tagesspiegel URL: http://www.tagesspiegel.de/); Pol. *Jedynie w Ełku może w okolicach 26 kwietnia spaść mały deszcz* (Gazeta IE 2006); Ukr. Завтра на Рівненщині очікується дрібний дощ (Syohodni URL: http://www.segodnya.ua);

4) duration: Eng. *The sunshine this afternoon is going to be welcome, but not long-lasting* (The telegraph. URL: http://www.telegraph.co.uk); Ger. *Lang ersehnter Regen* (Der Tagesspiegel); Pol. *Wyjątkowo długa i silna fala upalałów* (Gazeta IE 2006: 3.03); Ukr. *з 3-го по 7-е – невеликі дощі* (Syohodni URL: http://www.segodnya.ua);

5) temporality: Eng. *The other hot spells were in late-June and early-July* (The Sunday Telegraph); Ger. *Mit etwas Glück beschert uns der Frühherbst einen wunderschönen Altweibersommer und Nochmal Reichlich Obst* (Der Tagesspiegel URL: http://www.tagesspiegel.de);

6) mental characteristics: Eng. *August, they say, is the silly season – a month in which nothing serious happens and there is no real news to report* (The telegraph. URL: http://www.telegraph.co.uk); Ger. *ordentlich durcheinander Frühherbst* (neat chaos about the beginning of the fall) (Der Tagesspiegel URL: http://www.tagesspiegel.de); Pol. *Wiatr południowo-wschodni, w zachodniej połowie kraju umiarkowany i dość* (Gazeta IE 2006: 3.03); Ukr. *В Україні остаточно погіршиться погода на вихідні: прогноз синоптиків невтішний* (Syohodni URL: http://www.segodnya.ua).

8) attitude (good / bad): Eng. *The Met Office issued severe weather warnings for many parts of Britain* (The telegraph URL: http://www.telegraph.co.uk/); Ger. *Schlechtwetter Locations in Berlin* (Der Tagesspiegel).

Oxymoron was not found in synoptic texts of the studied languages. This figurative stylistic technique is not typical for weather forecasting.

***8. Reconstruction of Stylistic Elements that Provide Additional Characteristics of the Object of the Description.***

***8.1. Reconstruction of Comparison.***

The English NST comparison is most commonly found in subtitles, for example: *Washday blues as desert dust; and in the text itself: the grass turned brown, the courts became arid and dusty, the spectators dropped like flies on the hottest afternoons, and it was not little wonder that the players themselves did not suffer more from the heat* (The telegraph URL: http://www.telegraph.co.uk).

There were no comparisons found in the German and Polish NST, which are related to the laconic synoptic texts and lack of ambiguity in the interpretation of weather phenomena.

In the Ukrainian NST, the comparison is not figurative; it has a purely pragmatic character, mostly found in the text itself, as an appeal to the reader's memory: Ukr. *Взагалі нинішня осінь, на відміну від торішньої, на більшій частині території відзначилася досить посушливими умовами, надто на півночі країни* (Syohodni URL: http://www.segodnya.ua).

***8.2. Reconstruction of Hyperbole.***

One of the way to express exaggeration and at the same time intensification in order to increase the significance of the NST is the usage of the following semantic features:

1) active usage of words of assertive tone or categorical quantifiers: Engl. *Much of Britain should enjoy sunshine for the next couple of days as research in the wettest summer for 100 years* (The telegraph URL: http://www.telegraph.co.uk); Pol. *Na termometrach całkiem przyjemna temp. od 4 na północnym-wschodzie do 5–7 st. C na pozostałym obszarze*

(Gazeta IE 2006: 3.03); Ukr. *За оцінками метеорологічних станцій, більшість посівів озимини у слабкорозвиненому стані, що означає нечіткі перспективи для майбутньої перезимівлі* (Syohodni URL: http://www.segodnya.ua);

The usage of the above mentioned lexical units is characterized by a transversal semantic diffusion, so they are referred to as universal quantifiers, which cause the loss of object identification, which is associated with the description of the approximate results of weather phenomena, temperature regime, forecasts of experts.

2) active usage of the words of negative tonality: English. *Here, there was no relaxation of the cold weather over the Christmas holiday* (The telegraph. URL: http://www.telegraph.co.uk); Ger. *Wie lang die Let's talk about it, you know, Wetterexperten noch nicht absehen* (Der Tagesspiegel URL: http://www.tagesspiegel.de); Pol. *Brak świadomości zagrożenia ze strony żywiołu, jakim jest woda, sprawia, że niepotrzebnie narażamy się na niebezpieczeństwo* (Gazeta IE 2006: 3.03); Ukr. *Зима також буде вологою, і не очікується взагалі ніяких погодних катаклізмів, як було в Європі минулого року* (Syohodni URL: http://www.segodnya.ua)

***9. Conclusions and Perspectives of Further Research.***

The newspaper synoptic text is the specific reflection of people culture, their outlook and attitude to the surrounding world. Different language level units take part in their formation according to their interdependence and interaction.

We define the newspaper synoptic text as a constructive macrosign and we conclude that: 1) the NST provides a reflection of the people culture, its worldview, its attitude toward the surrounding world and natural phenomena, which manifests itself at different text levels: structural, semantic, syntactic; 2) the design of a newspaper synoptic message is characterized by a clear sequence of information blocks, since it is prescribed by the author in advance and is a guide for the reader; 3) in the semantics of the text through the external and internal elements the mental traits of the people are manifested, through the syntax and syntactic figures is reflected the linguistic design of the text and coded author's estimates.

The comparison of synoptic texts of four languages showed that English synoptic messages are more expressive, have more stylistic devices, although they have the probabilistic character, unlike the Polish messages are more laconic, concrete, and their aim is only informing and making the particular attitude and reaction.

***R e f e r e n c e s***

Aytov, S. Sh. (2014). Phylosophy of culture Yu. M. Lotman: cognitive dialogue semiotics and historical anthropology purpose. *Anthropological Measurements of Philosophical research*. Dnipro. 6. 32–42.

Aytov, S. Sh. (2015). Cognitive dialogue of East European philosophers of the first half of XX C. and methodological approach of historical anthropology. *Anthropological Measurements of Philosophical Research*. Dnipro. 8. 97–105.

Boldyrev, N. N. (2006). Yazykovye katehoryy kak format znanyya [Language categories as knowledge format]. *Voprosy kohnytyvnoy lynhvystyky*. 2. 5–22.

Bulakhovsky, L. A. (1954). *Fonetychni i morfolohichni pivdennorusyzmy v staroruskykh pamyatkakh XII–XIV st.* [Phonetic and morphological southern russizms in the Old Russian memoirs]. Pratsi Kyyivsk. derzh, un-tu, Humanitarni nauky. 133.

Cherkhava, O. O. (2015). Fenomen rekonstruktsiyi u linhvokomparatyvistytsi doby strukturalizmu [The phenomenon of reconstruction in comparative linguistics of the age of structuralism]. *Visnyk Kyyivskoho natsionalnoho linhvistychnoho universytetu*. K. : Vyd. tsentr KNLU. 18. 157–164.

Crystal, D. (2006). *Language and the Internet*. Retrieved from https://books.google.co.uk

Delva, O. V. (2014). *Rekonstruktsiya modalnykh svitiv: kohnityvno-komunikatyvnyy aspekt* [Modal worlds reconstruction: cognitive and communicative aspect]. Nova filolohiya. 64. 30–34.

Dronova, L. P. (2012). *Rekonstruktsyya v komparatyvystyke y kohnytyvno-oryentyrovannoy lynhvystyke* [Reconstruction in comparativism and cognitive and oriented linguistics]. Retrieved from http://philology.ru /linguistics1/dronova-12.htm

Dyakov, A. S. (2000). *Osnovy terminotvorennya: semantychni ta sotsiolinhvistychni aspekty* [Fundamentals of Terminology: Semantic and Sociolinguistic Aspects]. K. : Vyd. dim "KM Academia". 218.

Gensitskiy, Yu. D. (2016). Formation of Media Science infrastructure big data science in the age of high electronics. *Anthropological Measurements of Philosophical Research*. Dnipro: Vyd. 9. 89–95.

Halperin, I. R. (1981). *Tekst yak obyekt linhvistychnoho doslidzhennya* [Text as an object of linguistic studies]. M. : Nauka. 144.

Hudson, G. (1999). *Essential introductory linguistics*. Retrieved from: https://www.abebooks.co.uk/book-search/title/essential-introductory-linguistics/author/hudson/

Hutnikova, A. V. (2013). Semantychna deryvatsiya yak zasib popovnennya vokabulyaru nimetskoyi ta ukrayinskoyi movy [Semantic derivation as a means of replenishment of the the German and Ukrainian languages vocabulary]. *Naukovi zapysky Natsionalnoho universytetu "Ostrozka akademiya"*. 39. 28–29.

Ivanov, V. V. (1963). K rekonstruktsyy praslavyanskoho teksta [To the reconstruction of the Slavic text]. *Slavyanskoe yazykoznanye*. V: Mezhdunarodnyi syezd slavystov. Retrieved from http://www.philology.ru/linguistics3/parina-09.htm

Korolyova, A. V. (2013). Novi vyklyky s'ohodennoyi komparatyvistyky i kontrastyvistyky [New challenges of contemporary comparatism and contrastive linguistics]. *Problemy zistavnoyi semantyky*. K. : Vyd. tsentr KNLU. 11. 9–15.

Korolyova, A. V. (2014). Kohnityvna linhvokomparatyvistyka: vid rekonstruktsiyi pramovnykh form do rekonstruktsiyi struktur svidomosti [Cognitive Linguistic: from the reconstruction of ancient language forms to the reconstruction of the structures of consciousness]. *Visnyk Kyyivskoho natsionalnoho linhvistychnoho universytetu*. K. : Vyd. tsentr KNLU. 17. 2. 94–102.

Kretov, P. V., Kretova O. I. (2017). Symbolic landscape of consciousness: man between representationalism, functionalism and relativism. *Anthropological Measurements of Philosophical Research*. Dnipro: Vyd. 12. 27–39.

Lysychenko, L. A. (2004). Struktura movnoyi kartyny svitu [The structure of the linguistic picture of the world]. *Movoznavstvo*. 5–6. 36–41.

Roider, Ul. (1981). Griech. thumos "Mut" – ai. dhumah "Rauch". *KZ*. 95.

Selivanova, O. O. (1999). *Aktualni napryamy suchasnoyi linhvistyky (analitychnyy ohlyad)* [Current trends of modern linguistics (analytical review)]. K. : Vyd-vo Ukr. fitosotsioloh. tsentru. 148.

Selivanova, O. O. (2002). *Osnovy linhvistychnoyi teoriyi tekstu ta komunikatsiyi* [The Fundamentals of Linguistic Theory of Text and Communication]. K. : TsUL. 336.

Shutova, M. O. (2014). Rekonstruktsiya faktiv etnokultury vid arkhetypiv do stereotypiv [Reconstruction of the facts of ethnoculture from archetypes to stereotypes]. *Problemy semantyky, prahmatyky ta kohnityvnoyi linhvistyky*. K. : Lohos. 25. 508–522.

Trubachev, O. N. (1988). Pryemy semantycheskoy rekonstruktsyy [Methods of Semantic Reconstruction]. *Sravnytelno-istorycheskoe izuchenye jazykov raznykh semei. Teoryya lynhvystycheskoy rekonstruktsyy*. 197–222.

Weise, G. (1984). *Zur Spezifik der Intertextualitaet in literarischen Texten. Textbeziehungen: linguistische und literaturwissenschaftliche Beitraege zur Intertextualitaet* [On the specificity of intertextuality in literary texts. Text relations: linguistic and literary contributions to intertextuality]. Tübingen: Stauffenburg. 39–49.

Williams, R. A. (1924). *The Finn Episode in Beowulf: An Essay in Interpretation*. Cambridge: Cambridge University Press. 184.

Zhol, K. K. (1984). *Mysl, slovo, metafora. Problemy semantyky v fylosofskom osveshchenyy* [Thought, word, metaphor. Problems of semantics in philosophical light]. K. : Naukova dumka. 301.

## *Lexicographic Sources*

VTSUM – *Velykyy tlumachnyy slovnyk ukrayinskoyi movy* [Great Explanatory Dictionary of Ukrainian Language] (2005). Kharkiv: "Folio". 767.

LSD – *Literaturoznavchyy slovnyk-dovidnyk* [Literary dictionary reference book] (2006). K. : "Akademiya". 752.

SLT – *Slovnyk literaturoznavchykh terminiv* [Dictionary of literary terms]. Retrieved from http://www.ukrlib.com.ua

FES – *Filosofsky entsyklopedychnyy slovnyk* [Philosophical encyclopedic dictionary] (2002). K: Abrys. 742.

## *Illustrative Material*

*Dovhostrokovyy prohnoz pohody vid naukovtsiv-meteorolohiv* [long-term weather forecast from meteorological scientists]. Retrieved from http://ukr.media

*Obozrevatel. Prohnoz*. Retrieved from https://www.obozrevatel.com

Pohoda [Weather forecast] (2009). *Ukrayinska pravda*. 12.12.
Pohoda [Weather forecast] (2010). *Ukrayinska pravda*. 26.08
Pohoda [Weather forecast] (2012). *Ukrayinska pravda*. 16.08.
Pohoda [Weather forecast] (2014). *Ukrayinska pravda*.11.04.
Pohoda [Weather forecast] (2016). *Ukrayinska pravda*. 2.02
Pohoda [Weather forecast] (2016). *Ukrayinska pravda*. 18.07.
Pohoda [Weather forecast] (2016). *Ukrayinska pravda*. 10.10.
Prohnoz pohody voseny 2015 roku [Weather forecast in autumn of 2015]. *Sylna Ukrayina*. Retrieved from: http://sylnaukraina.com.ua/
*Syohodni. Pogoda* [Weather forecast]. Retrieved from http://www.segodnya.ua
Syurpryzy zymy [Winter surprises] (2014). *Silski Visti*. Retrieved from http://www.silskivisti.kiev.ua/19182/index.php
Eden, P (2003). The weather week. *The Sunday Telegraph*. 2.03. 40.
Scott, A. (2005). Weather and travel outlook. *The Sunday Times*. 24. 30.
The weather channel (2015). *Coventry Telegraph*. 2015. 17.04
The weather channel. *Coventry Telegraph*. Retrieved from http://www.coventrytelegraph.net
Weather (2013). *Daily Telegraph*. 7.11.
Weather (2009). *The Telegraph*. 01.01.
Weather (2011). *The Telegraph*. 07.04.
Weather (2012). *The Telegraph*. 26.01.
Weather (2013). *The Telegraph*. 28.11.
Weather (2014). *The Telegraph*. 1.04.
Weather (2014). *The Telegraph*. 3.04.
Weather (2016). *The Telegraph*. 17.11.
Weather (2016). *The Telegraph*. 21.11.
Weather (2016). *The Telegraph*. 22.12.
Weather (2017). *The Telegraph*. 7.02.
Weather. *The telegraph*. Retrieved from http://www.telegraph.co.uk/
Pogoda (2011). *Fakt*. 17.02.
Pogoda (2012). *Fakt*. 4.02.
Pogoda (2013). *Fakt*. 31.10.
Pogoda (2016). *Fakt*. 25.08.
Pogoda (2016). *Fakt* 30.09.
Pogoda (2016). *Fakt* 2.10.
Pogoda (2016). *Fakt* 9.11.
Pogoda (2016). *Fakt* 18.11.
Pogoda (2016). *Fakt* 26.11
Pogoda (2006). *Gazeta IE* 3.03.
*Tvoja pogoda*. Retrieved from: http://www.Tvoja pogoda.pl/
*Aargauer zeitung* [Aargauer newspaper] (2016). 11.08.
*Bild* (2014). Retrieved from: http://worldmags.net/146738–bild–25–august–2016.htm
*Der Tagesspiegel* [The daily level] (1999). 16.11.
*Der Tagesspiegel* [The daily level] (2007). 2.07.
*Der Tagesspiegel* [The daily level] (2007).12.11.
*Der Tagesspiegel* [The daily level] (2012). 21.07.
*Der Tagesspiegel* [The daily level] (2013). 10.01.
*Der Tagesspiegel* [The daily level] (2014). 06.01.
*Der Tagesspiegel* [The daily level] (2015). 3.03.
*Der Tagesspiegel* [The daily level] (2015). 9.11.
*Der Tagesspiegel* [The daily level] (2016). 13.11.
*Der Tagesspiegel* [The daily level]. Retrieved from: http://www.tagesspiegel.de/
*Frankfurter allgemeine zeitung* [Frankfurt general newspaper] (2014). 26.12.
Wetter heute [Weather today]. *Wolfenbütteler zeitung*. Retrieved from: http://www.wolfenbuetteler-zeitung.de/

**Бібліографічний опис:**

Коломієць, О. М. (2018). Реконструкція образно-стилістичних елементів газетних синоптичних текстів (на матеріалі англійської, німецької, польської та української мов). *Науковий часопис Національного педагогічного університету імені М. П. Драгоманова. Серія 9 Сучасні тенденції розвитку мов*. К. Вип. 17. С. 81–98. DOI: https://doi.org/10.31392/NPU-nc.series9.2018.17.07

***Анотація***

*У статті розглядаються нові методологічні можливості прийому реконструкції, який у когнітивній лінгвістиці почали застосовувати для виконання інших – ширших завдань, пов'язаних з необхідністю відновлення структур свідомості, до яких належать і газетні синоптичні тексти (далі – ГСТ) як ментальні утворення. Здійснюється декодування внутрішньосемантичних елементів ГСТ, серед яких образно-стилістичні засоби, які базуються на взаємодії 1) словникового та контекстуального значень (метафора, метонімія, іронія), 2) основного та похідного значень (зевгма, гра слів), 3) логічного та емотивного значень (епітет, оксюморон), 4) логічного та номінативного значень (антономазія), а також ті, 5) що надають додаткової характеристики об'єкту опису (гіпербола, порівняння).*

*Установлено, що основним засобом ГСТ, що базується на взаємодії словникового та контекстуального значень, є метафора, у ході реконструкції якої вдалося визначити чотири її типи: номінативні метафори, образні, когнітивні та генералізуючі. Визначено 3 моделі метонімічного перенесення, серед яких: назва явища погоди – назва результату дії, назва дії – назва об'єкта дії, назва частини явища погоди – назва цілого явища погоди, а також 2 напрями семантичного переосмислення явищ, пов'язаних із прогнозуванням погоди: порушення ритуальності та звичності повсякденного життя та репрезентація завуальованості ставлення до зображуваних явищ погоди.*

*Зафіксовано, що менш продуктивними образними засобами в ГСТ досліджуваних мов є ті, що засновані на взаємодії основного й похідного значень та логічного й емотивного значень, а серед найтиповіших засобів, що надають додаткової характеристики об'єкту опису, виявлено гіперболу – для вираження надмірного переживання сценарію розгортання погодних умов, та порівняння – для апелювання до досвіду та пам'яті читачів, що допомагає їм увиразнити запропоновану автором інформацію.*

***Ключові слова:*** *реконструкція, газетний синоптичний текст, образно-стилістичний елемент, стилістичний прийом, внутрішньо семантичні елементи.*

**DOI:** https://doi.org/10.31392/NPU-nc.series9.2018.17.08
**UDC:** 81'0

**Alla V. Korolyova**
National Pedagogical Dragomanov University, Kyiv, Ukraine

# COMBINATORIAL SYNTAGMATICS: FROM THE THEORY OF VALENCY TO THE THEORY OF CONCEPTUAL INTEGRATION

**Bibliographic Description:**

Korolyova, A. V. (2018). Combinatorial Syntagmatics: from the Theory of Valency to the Theory of Conceptual Integration. *Scientific Journal of National Pedagogical Dragomanov University. Series 9. Current Trends in Language Development*. K. 17. 99–111. DOI: https://doi.org/10.31392/NPU-nc.series9.2018.17.08

***Abstract***

*The topical and complicated problem of modern linguistics has been examined in the article. It deals with the study of the processes and mechanisms of creating new senses by the various combinations of both language signs among themselves and the transformation of the meanings of ready-made signs. This problem was begun to be solved in structural linguistics by the representatives of the theory of valency and the theory of distribution. The following conclusion has been made: developing in parallel as two directions of syntagmatics, both the theory of valency and the theory of distribution caused a lot of discussions on their correlation between them, as well as with the understanding of the problem of compatibility in general. However, their representatives agreed that these categories are in a relationship of matching: inclusion, cohesion and interdependence. They are represented with two levels of combinatorial syntagmatics: while the language level is more typical for valency, then the speech one is, predominantly, for distribution. The particular attention is paid to a new cognitive view of the essence of the valency and distribution. It helps to assume that both notions are broadly understood to be cognitive categories that reflect the ability of native speakers to associate certain language signs in a specific communicative situation, usually called the context. It is pointed out that the development of this problem was reflected in the works of representatives of compositional semantics. They first focused their attention on studying the relationship among the configurations of components of complex signs from the cognitive point of view. The arguments are given to justify a new stage in the development of combinatorial syntagmatics, developed by J. Fauconnier and M. Turner, the supporters of the theory of the conceptual integration. According to it the creation of new senses by the configuration of language signs occurs in the system of mental spaces – the mental spheres (cognitive contexts reflected in the consciousness of the carriers of a certain language), connected with the comprehension by a person of various situations and having a cognitive status, i.e. with the process of cognition of the phenomena of the surrounding reality.*

***Keywords****: the theory of valency, the theory of distribution, combinatorial syntagmatics, the configuration of the language signs, compositional semantics, the theory of conceptual integration.*

***1. Introduction.***

The modern anthropocentric and cognitive-oriented linguistics considers a language to be an instrument that reflects the structures of human knowledge, the operations on which are performed in its cognitive system in the process of perception and generation of speech (Dyachkova 2014: 155). The language provides the processes of categorization and conceptualization of the world that represent certain conceptual structures at various levels.

Such a view on a language that makes it possible to analyse many language phenomena more deeply with the appeal direct to the consciousness of native speakers. Exploring the language through the structure of consciousness, one can get an access to different knowledge on the world (A. A. Zalevskaya (Zalevskaya 2004), Ye. S. Kubryakova (Kubryakova 2004), etc.). The following thought has already become a trivial one: perceiving the world, a person reflects it in the form of certain structures of knowledge that get a language embodiment. According to T. Yu. Lopatina's opinion, "the mental entities acquire the symbolic forms, thereby enabling them to operate at the level of the language: to create various language constructions, the study of which allows us to assume how the correlation between different mental spaces is being represented" (Lopatina 2006: 170).

In the cognitive-discursive paradigm the problems of the interaction of signs in the composite constructions of a language (from a word to cognitive structures) are considered in the theory of the conceptual integration of the mental spaces of J. Fauconnier and M. Turner, in the theory of frames of C. Fillmore and his followers, etc. They contribute to the elucidation of regularities in the rules for the semantic composition of signs. According to Ye. S. Kubryakova's view, the necessity to study the mechanisms of interaction (and not just folding!) of the meaning of the components of the complex signs and types of correlation and relationships among them (Kubryakova 2002a; 2002b).

***2. Formation of Combinatorial Direction in Linguistics.***

According to M. V. Vlavatskaya's words, in classical structural linguistics the issues on the combinatorics of the language signs "began to be solved in the aspect of syntagmatics based on linear relations of the language signs. By the middle of the XX century the following understanding is being formed in linguistics: the study of the syntagmatic construction of speech ought to become the subject of a special field of linguistics, which will directly study the rules for composing combinations of the language signs in accordance with a stated meaning (Vlavatskaya 2013: 3). At the end of the XX century – early XXI century the new trends have emerged in the study of syntagmatics and combinatorics from the cognitive point of view. They date back to the theory of conceptual integration. Such a turn was dictated by a cognitive view of the semantics of a word in general and the components of a lexical meaning and their compatibility within the lexeme, in particular. It allows one to combine the words in a broad cognitive context (situational) to achieve certain goals.

Thus, there is a reason to speak on a new stage in the development of combinatorial linguistics (M. V. Vlavatskaya (Vlavatskaya 2013) et al.), i.e. the directions of theoretical linguistics that study the syntagmatic relations of the language signs and their combinatorial potential in the context of the conceptual integration of mental spaces. Its basis is formed, on the one hand, by the syntagmatics, i.e. the study of the language rules for the compatibility of the single-level signs, on the other hand, by the combinatorics, i.e. the analysis of combinations of the language signs that are conditioned by a stated meaning (Vlavatskaya 2013: 5), but within the third one, the compositional semantics (Ye. S. Kubryakova (Kubryakova 2002a, 2002b)) and conceptual integration (J. Fauconnier, M. Turner (Fauconnier et al. 1995) et al.), i.e. the disclosure of cognitive mechanisms for the creation of new meanings in the process of syntagmatic-combinatorial properties of the language signs.

According to M. V. Vlavatskaya's observations, ontologically, these three aspects are associated with the problem of the compatibility of the language signs. It was developed practically at all the language schools of the far abroad at different times: the French syntagmatics, or functional syntax (A. Martine), the transpositional syntagmatics (Ch. Bally), the structural syntax (L. Tenier); the German theory of valency (L. Weissgerber, H. Helbig, H. Schreiber et al.); the Danish glossematics (L. Hjelmslev); the American descriptive linguistics (L. Bloomfield et al.), the London contextualization theory – the system-functional linguistics (J. R. Förs, M. A. K Holliday et al.), the theory of semantic synthesis (J. Katz, W. Weinreich et al.), etc. (cited in: Vlavatskaya 2013: 4–5), as well as the Russian and Ukrainian linguists, i.e. the representatives of the syntagmatic direction, in particular, the theory of general syntagmatics (O. S. Akhmanova, L. V. Shcherba, V. V. Vinogradov, A. A. Reformatsky, A. A. Kholodovich, S. I. Kartsevsky, M. M. Plyushch), the syntactic syntagmatics (V. V. Vinogradov, I. R. Vykhovanets, N. B. Ivanitskaya, A. I. Leuta, N. Yu. Shvedova, G. A. Zolotova, N. A. Slyusareva, D. N. Shmelev et al.), the semantic syntagmatics (Yu. D. Apresyan, V. G. Gak et al.), the lexical syntagmatics (I. A. Melchuk, O. V. Demyanchuk, A. K. Zholkovsky, A. A. Ufimtseva et al.), the contextual theory (M. P. Kochergan et al.), the compositional semantics (Ye. S. Kubryakova, L. F. Omelchenko, N. N. Polyuzhin, T. S. Tolcheeva et al.).

Despite the fundamental tradition of developing compatibility issues development as categories of syntagmatics (O. L. Lyubovskaya, W. Abraham, L. N. Rebrina N. L. Shamne, M. V. Milovanova, E. V. Terentyeva, P. Hanks, L. Fesenmeier, V. G. Gak, N. Barri et al.) and combinatorics (S. Eger, M. P. Serrano et al.) in a broad and narrow sense. The issues of the correlation of such notions as "valency", "distribution", "context", etc. remain unsolved up to now.

***3. Problems of the Theory of Valency in Combinatorial Syntagmatics.***

The preliminary analysis of the multidimensional scientific literature of scholars of different periods and different scientific schools gives fundamentals to fix the similar views on the nature of the notion of "valency", although with some differences. They are: 1) the word's property to be combined with other words in the context of speech (S. D. Katznelson); 2) the ability of a word to form a word combination with other words (G. Helbig, V. Shenkel); 3) the ability of a word to establish relations with other words and to discover places based on its significance (K. E. Zommerfeldt, H. Schreiber et al.); 4) the ability of a verb to be combined with its arguments (L. Tenier), etc.; the various schemes of combinations (D. N. Shmelev), etc. (Vlavatskaya 2013: 6).

In order to establish the zones of intersection of this notion with its above-mentioned adjacent terms and descriptions, it is necessary to briefly dwell on the history of the development of the theory of valency in linguistics and to formulate principal and typical positions for valency that distinguish it from the doublet notions. In addition, a task to search for the origins of the theory of conceptual integration is important for the scientific idea of this article. In our opinion, it goes back to each of the above-mentioned adjacent terms of combinatorial syntagmatics.

In combinatorial syntagmatics, the issue on the founder of the notion of valency is still not solved: L. Tenier, who is most often attributed the primacy, or it is S. Katznelson. K. Buller, the German linguist, is also represented among these scholars.

There is a point of view of M. V. Vlavatskaya among the many scholars, who call L. Tenier "the author of the theory of valency". It is represented in her fundamental most recent doctoral thesis and one of her articles (Vlavatskaya 2012: 47). She states that "the scholar uses the notion of valency to denote the verbal compatibility and understands it as "the deployment of the verbal core of a sentence by the actant-dependent participants"

(Tenier 1988). She also considers that such an interpretation of the valency is comparable to the notion of one-, two- or three- predicate structure and it is related to the verbocentric theory of a sentence (Vlavatskaya 2012: 47). At the same time, she correctly calls S. Katznelson, who first used the term of "valency", by which he understood "the properties of a word to be implemented in a certain way in a sentence and to enter into certain combinations with other words" (Katznelson 1948: 132).

However, it is hardly possible to introduce the term without a theoretical justification and argumentation in scientific use. That is why we agree with V. G. Gak (Gak 1998: 79–80), who believes that the notion of valency was first developed by S. D. Katznelson in his work "On the Grammatical Category" (Russ. "О грамматической категории") published in the Bulletin of the Leningrad University (Russ. "Вестник Ленинградского университета") in 1948, but not without reason, since L. Tenier, the French linguist, who was engaged in the Slavic languages and began to develop the problems of general syntax since the middle of 1930s. But only after more than twenty years, in 1953, he published a few small articles on this topic and the brochure "An Essay of Structural Syntax" (Russ. "Очерк структурного синтаксиса") (one year before his death). The scholar's main theoretical work is "The Fundamentals of Structural Syntax" (Russ. "Основы структурного синтаксиса") that was published with great difficulty in Paris in 1959 after his death and at first it did not find recognition among his contemporaries. It can be seen that the theory of valency was published in the works of L. Tenier somewhat later than in S. D. Katznelson ones (1948).

S. D. Katznelson linked the valency with the overall combined ability of the words in a sentence and signs at different levels (Katznelson 1987: 32). He also mentioned even the valency of conjunctions and prepositions, but this idea was not elaborated in details in his scientific works. At the same time, he saw the main language sign not in a word, but in a sentence. The scholar attributed the valency to the syntactic type and indicated that a word in a language in its full sense is a sign possessing certain syntactic potencies that enable it to be used only in accordance with specific grammatical relations typical for every language (Katznelson 1987: 32).

Therefore, considering the issue of the relationship of a language with the reality, S. D. Katznelson prefers a sentence, but not a word. Although he does not deny that the operational availability of the inventory of the verbal signs is a prerequisite for the formation of speech (Katznelson 1972: 149). "By combining words and arranging them in a sentence, the speech seeks to recreate a holistic image of events [...] lost in a language. In other words, the words that are the main sign signs of a language that are principally partial. The sentences as minimal signs of speech are relatively the holistic events. Comparing the mental content of a sentence and a word, S. D. Katznelson (Katznelson 1972: 140) says that "the mind content of a sentence is sometimes called the "sense" or "meaning", equating it to the meaning of a word. But the mental content of the sentences is qualitatively different from the thought content of words withdrawn from the context of a sentence. A word itself outside a sentence does not say anything on the real facts, it does not reproduce them". Taking into account this view, it should be admitted that today it corresponds to cognitive-discursive paradigm. According to S. D. Katsnelson's words, "the world is not a collection of objects (words), but events and relationships among them" that have already been tested by time and do not raise objections.

S. D. Katznelson (Katznelson 1987: 20–21) explained the valency as a hidden indication in the meaning of a word for the necessity to fill it with words of certain types in a sentence. Hence, it can be assumed that the valency is not typical for all words, but only for those that give a feeling of incomplete utterances.

L. Tenier used the term of "valency" to refer to the compatibility of verbs and the definition of the number of actants, which can be added to a verb (Tenier 1988). In the theory he considered a sentence as a realization of the syntactic valencies of the words, but at the same time he emphasizes the central position of the verb-predicate in a sentence. In this regard, his position on the valency partly coincides with S. D. Katsnelson's point view. When it comes to what term in a sentence causes a feeling of incompleteness of the utterance, it is obvious that this verb is a predicate.

It was the theory of L. Tenier that was continued by the representatives of the structural and semantic syntax, from 60s and 80s of XX century. The notion of valency was actively studied mainly with the respect to verbs, but later the linguists started to use the term valency in a broader sense, linking it with other parts of speech (S. D. Katznelson mentioned on it).

According to V. G. Gak (Gak 1998: 79–80) the following characteristics of the valency can be mentioned: 1) the general type of valency (active / passive), 2) the obligatory valency (mandatory / optional), 3) the number of valency (monovalent / bivalent / trivalent verbs), 4) the form of the complementary member (part of speech, word or sentence, infinitive construction), 5) the categorial semantics of a word that realizes the valency (animation / inanimation, concreteness / abstraction, accountability / inaccountability).

These characteristics reflect different levels of manifestation of valency (Semenyuk 1977: 111–115; Stepanova, Helbig 1978; Vlavatskaya 2012: 47 et al.): 1) *logical* (extralinguistic relations among conceptual contents), 2) *semantic* (compatibility of semantic components (properties, semes), 3) *syntactic* (obligatory or optional occupancy of open positions that are not the same in different languages).

For example, *at the logical level* of a verb the scholars (I. A. Melchuk et al.) come from the specific content of information transmitted by its meaning and consider only the number of arguments under the predicate and the nature of its correlation. On the one hand, the predicates are an intellectual model of denotata, on the other hand, a model of information transmitted by the language structures. In this case, it is necessary to take into account the existing natural correlation among the meaning of a verb and both the number and type of its actants (participants of a situation described by the word). Thus, the specific meaning of a verb requires certain semantic actants, which are an indispensable condition for determining the semantic valency of a word. I. A. Melchuk distinguishes the semantic actants and their valency from syntactical actants and their valency: if the first are the signs and relations of the form of content of the speech segment, then the latter are the signs and relations of the form of expression of a speech segment. The syntactic actants of a word are possible dependent members for a stated word [...] (Melchuk 1999).

It is obvious that, taking into account the different levels of manifestation of the characteristics of the valency of the words, I. M. Boguslavsky proposed a definition of valency, under which he understood the property of the word L to describe a situation in which there is a participant X [...]. A word has so many valences, how many participants in a situation (semantic actants) are necessary to be mentioned in order to fully interpret its meaning (Boguslavskiy 1996: 360).

The same point of view on the nature of valency is inherent in M. Vsevolodova. It reflects the synthesis of ideas of S. D. Katznelson and L. Tenier, because, first of all, this phenomenon is considered in a sentence, which indicates a certain extra-linguistic situation. Although, according to M. Vsevolodova, "every language situation in itself is unique (any situation will happen at another time, in another place or with other specific participants – with actants in L. Tenier). In linguistic consciousness it is reflected as any typed event: the similar situations have already happened, that is why therefore the linguistic consciousness fixed them in the form of a definite formula, in the form of a certain composition of

components; it was not just the fixed composition, but the configuration of these components, the structure of the images" (Vsevolodova 2000: 121).

This view of the essence of the valency indicates that in a broad sense the notion of valency is a cognitive category of combinatorial linguistics that reflects the ability of a native speaker to associate certain language signs in a particular communicative situation, usually called the context or environment (Ispiryan 2012: 75) .

***4. The Theory of Distribution in Combinatorial Syntagmatics.***

In American descriptive linguistics the notion of all possible environments of a language sign in certain contexts was called ***the distribution*** as a term adjacent to valency. It was actively used in applied linguistics in the 40s – 60s of the XX century in the period of intensive development of automatic analysis and machine translation of the text. The principles of distributive analysis (one of the technique of the structural method) was formulated by L. Bloomfield at the beginning of the XX century. They were first applied in phonology and morphology. Later the supporters of American descriptivism tried to create a special technique for formal analysis of linguistic material without resorting to the meanings of the language signs (of course, this attempt was inefficient and was sharply criticized). It can be seen that in the works of scholars of this direction the main attention was focused on the search for the precise methods of analysing language material and describing the language structure of a language (Karelskaya 1988: 42).

The fact that distribution and valency are contiguous notions is indicated by all linguists who are investigating these phenomena. In particular N. A. Berezovska-Savchuk notes that "the distribution is closely connected with the valency as a phenomenon of the form of speech, which is realized at the level of real communication, with the phenomenon of the form of language, which is distinguished at the level of abstract thinking". But in this case, contrary to traditional thoughts on whether these phenomena are broader or wider, the scholar correctly states that they belong to different logical forms, and they cannot be identified. They cannot be regarded as something autonomous, independent of each other. This position is correct one, it reflects the ontological nature of every of these phenomena, and most importantly, it denies the former view of the hierarchy of relations between the notions of valency and distribution (Berezovska-Savchuk 2016: 36). By the way, many grammarians wrote on it at that time that the fact that the valency is only a part of the distribution, or valence-essential communications, actants, described with the help of parts of speech and the members of the sentence, as well as with the help of semantic terms (properties, semes, etc.). It is written in the work "Parts of Speech and the Problem of Valency in Contemporary German" (Russ. "Части речи и проблема валентности в современном немецком языке") of M. D. Stepanova, G. Helbig (Stepanova, Helbig 1978: 148).

However, there is another point of view according to which the distribution and valency are treated as two different approaches to studying, first of all, the connections of a verb: the first is the semantic and syntactic and the second is the quantitative (Lehmann 1974). But this does not deny the fact that both notions come into relationship with the general notion of compatibility (cited in: Berezovska-Savchuk 2016: 37–38).

Analysing the definition of the distribution proposed by O. S. Akhmanova in the Dictionary of Linguistic Terms (Russ. "Словарь лингвистических терминов"). It is defined as "the collection (class) of all the environments (contexts) in which a stated sign of a language can meet, opposable to all those environments in which it cannot meet, i.e. place, order, compatibility and the properties of its use in terms of the location of the individual parts of the utterance relative to each other" (Akhmanova 2007: 137). It can be argued that the central notion here is the context that creates the conditions for the variability of the meaning of a word. It was noted by I. A. Sternin, who considered the distribution in close

correlation with the lexicosemantic variants of a word, because every of them has a unique distributive form (Sternin 1979: 18).

At the same time, I. A. Sternin highlighted *the syntactic distribution* (the syntactic construction model in which the stated word meaning is realized and which is usually described by certain formulas of syntactic constructions caused by one or another lexicosemantic variant of a word) and *the lexical distribution* (the semantic category of words (certain semantics) that are directly combined with the semantically realizable word. He also highlighted this meaning in the latter and he does not indicate that the main factor in establishing the distributive relations among LSV of a word is the context, called as the term "the syntagmatic environment of a language element" in the Structural Linguistics.

N. A. Berezovska-Savchuk correctly notes that the distribution is [...] any use of a word in speech (context) (Berezovska-Savchuk 2016: 38). The scholar proposed the distribution to be mandatory and optional. *The mandatory distribution* represents such an actant filling of the predicate environment, which completely realizes the semantics of a predicate word in the necessary context. *The optional distribution* has a refinement nature that details the general semantics of syntactic construction (sentence). The mandatory / optional nature of the distribution is verified by the attempt to remove the actant position from the syntactic structure: in the case of violation of the semantic integrity of a sentence, there is a mandatory distribution, and vice versa, if such seizure does not affect the content and meaning of the construction, the optional distribution is to be certified.

Here the context is understood traditionally as a verbal environment of a language sign. W. Schmidt laid the verbal environment as a context to the foundation of its theory of the actual meaning of a word (Schmidt). Later in the second half of the XX century the distributive environment of a word in the aspect of its contextual use began to be regarded as the language connections of a word with other words (see the work "Word and Context" (Russ. "Слово и контекст") of M. P. Kochergan) in a particular communication situation.

***5. Role of Context in Combinatorial Syntagmatics.***

M. Pinkal correctly believes that almost all the expressions of the natural languages depend in their content in one way or another on the situation in which they are used (Pinkal). He calls such a situation as the context of the utterance. His idea is not new, because from the Early Middle Ages it has been repeatedly asserted that a word outside the context does not matter at all. This assumption gave rise to two opposing approaches to the consideration of the question of the semantic independence of a word. The first approach was typical for glossematics, in particular L. Hjelmslev (Hjelmslev 1960: 303) said that "a sign does not have any meaning in absolute isolation; any meaning of a sign arises in the context of [...]". The representative of the second point of view is V. V. Vinogradov (Vinogradov 2001: 14); its essence deals with the fact that "regardless of use, a word is represented in the mind with all its meanings, with hidden and possible, ready for their actualization".

The cognitive science combined these two views and gave an answer to this discussion. It argued, like V. V. Vinogradov, the academician, that a word is the context itself. The facts indicate that words encode the former experience, the former contexts of its use. A word is the repository of the former situations in which it was used. It can be said that the word is a reservoir of former contexts, the former uses ingrained in the speaker's experience (in the mind) (Kecskes 2004).

A language reflects a previously known reality, but it is ready to change, as it is required by the sociocultural factors. On the other hand, the changes that occur in a language itself, with the use of the old words and word expressions, show the internal capabilities of a language itself. The lexical meaning of a word encodes the contexts in which it was used (Kecskes 2004).

S. D. Katznelson (Katznelson 2001) supported this position and said that "the context is not a meaning generator, but their external developer. The words encoding the former contexts of the use of a stated word or word expression play the same important role in determining the actual meaning of a stated word, like the actual context of use.

The dynamism of the context is expressed in the following: the words generate actual contexts, but the contexts generate word meanings. Hence, there is a correlation between the two sides of the context. At one time Yu. M. Lotman (Lotman 1966) also considered the text not only as a generator of new meanings, but also as a condensate of cultural memory. "A text has the ability to preserve the memory of its previous contexts", the scholar wrote, calling this phenomenon the memory of a text (Lotman 1966).

At the same time, for communication of communicants it is necessary that similar images of a signifier and a signified (the words' meanings) and the correlations of these images (the generated meanings) exist in their consciousness. Only in this case the words of a speaker will cause the corresponding images of a listener. The image of a world that constitutes the common of a sign of a speaker and a listener and determines the perception (sense) of a sign is called the presupposition in cognitive-discursive linguistics.

But not only the presuppositions affect the configuration of signs in a certain context, but primarily the type of a language on which the valency and distributive capabilities of a word depend.

N. Chomsky (Chomsky 1982) distinguishes between the configurational and non-configurational languages ones based on how the words are organized in the sentences. The word order defines the grammatical relationships, but the logical object usually coincides with the grammatical object in the configurational languages, particularly in English. The suffixes and endings express the grammatical meanings, but different permutations of the word order are possible without a major change in the meaning of a sentence (but also not always) in the non-configurational languages, for example, in Ukrainian.

Such an approach indicates that the focus was on the word and its behaviour in the process of constructing on a sentence in Classical Syntagmatics.

***6. Cognitive Vector of Development of Combinatorial Syntagmatics.***

However, the ideas of the cognitive view on the nature of the meaning of a word are gradually ripening in the works of psychologists of the second half of the XX century. The fact of the development of meaning L. V. Vygotsky (Vygotsky 1960) associated with consciousness and he said that a word is the apparatus that reflects the external world in its correlations and relationships. The context is started to be considered as the skills of information design in the form of language, because the factors of repeatability of ready-made constructions. Such the collection of constructions is constantly represented in the mind of a person, as well as the new opportunities for compatibility (combinatorics) of signs.

This point of view was inherent in the works of the representatives of compositional semantics (see the work of Ye. S. Kubryakova), but later in the cognitive interpretation, as well as in the works of the scholars of the theory of conceptual integration.

Ye. S. Kubryakova points out that, trying to explain the nature of the meaning of signs, which represent a combination / composition / configuration of several ready-made signs of a language in their composition, H. Frege introduced the scientific term "compositional semantics". The scholar believed that the semantics of a complex sign is a "composite function of the meanings of those signs that are part of a complicated sign and the relationship among them" (Kubryakova 2004: 440). Later, in the study of the semantics of complex signs, the search for linguists passed in two directions: 1) in the direction of studying the meaning of the components of complex signs and 2) in the direction of determining the type of relations between these components.

According to Ye. S. Kubryakova, a new stage in the development of compositional semantics began with a cognitive vector in linguistics where "the problems of organizing semantic structures among different language signs began to be analysed as problems of objectifying these signs of different knowledge structures as problems of participation of these signs in the processes of conceptualization and categorization of the world" (Kubryakova 2002: 5–6), i.e. in another, broader context that was called the cognitive context by N. N. Boldyrev.

In the future the compositional semantics became the object of study in the theory of conceptual integration of the mental spaces of J. Fauconnier and M. Turner, in the grammar of constructions and the frame approach of C. Fillmore and his followers. It contributed to a deep ontological explanation of the rules (possibilities) of the semantic composition of signs (i.e. valency, distribution, compatibility). According to Ye. S. Kubryakova, to identify what the types of interaction are observed in complex signs of different orders (Kubryakova 2002a; 2002b).

I. Sweetser in his work on compositionality emphasizes that the ability of a language to new combinations of signs is its central property. The scholar notes that the formal theories of semantics are not fully capable of giving it an adequate interpretation, but the theory of the conceptual integration of the mental spaces of J. Fauconnier and M. Turner reveals the nature of this phenomenon. Even in the simplest cases of a compatibility of an adjective with a noun, there is not at all a simple addition of meanings, but something much more complicated. In explaining such cases, it is also necessary to use the idea of merging different mental spaces, as well as the ideas on active zones in the objects described, thoughts on profiling (see R. Langacker), and concepts of frames (see M. Minsky), etc. (Sweetser 1999: 131).

***7. The theory of conceptual integration*** correlates with the universal principles of human cognition and language as a way of expressing it, according to which the scholars explain the process of conceptual integration as a cognitive instantaneous mechanism of the creative juxtaposition of informative elements in a system of mental spaces. They are the mental spheres of conceptualization (cognitive contexts reflected in the consciousness of carriers of a certain language) that are associated with the understanding of real situations, past and future, as well as have a purely cognitive status, i.e. they do not exist outside the mind of a person (Fauconnier 1998).

The mental dimensions are organized with the help of cognitive models. As a rule, two input mental dimensions participate in the usual model of conceptual integration. The cognitive operation on mapping the elements of their structures based on the identity, similarity and analogy is performed among them (Fauconnier, Turner 2003). In the theory of a cognitive metaphor such an operation is called the mapping (J. Lakoff et al.). In the theory of valency and distribution a complex mechanism of mapping or conceptual integration was explained not at the deep (cognitive) level, but at the level of ready-made configurations of language signs, i.e. at the language level.

The general that signs the source mental spaces is projected into the so-called generic space, which is a special combinatorial mechanism. In the process of conceptual integration a new model of the generated space is transferred to every source mental dimension that ensures the structural consistency of their elements. Then there is a process of selective integration of structures and elements of the source spaces to create an independent mixed dimension, i.e. the blend, which results in an integrated structure with a new meaning. The formation of a new meaning (a new structure of consciousness) occurs through three cognitive operations: 1) the composition of the elements of the source mental dimensions and the establishment of relations among them that do not exist when they are separately

considered; 2) the completion based on the participation of the background conceptual structures of native speakers; 3) the elaboration, i.e. the mental reflection on the new structure. Moreover, J. Fauconnier and M. Turner note that these operations are carried out instantaneously, that is why the selection of their sequence is a rather conditional scientific explanation of the phenomenon of conceptual integration (Fauconnier, Turner 2003).

The integrated spaces reflect one of the fundamental properties of human thinking and language, i.e. the property of combinability, or structural compatibility, is the result of the logicogrammatical, lexicosemantic correlation of the components of the formed language structure, i.e. the new structuring of the experience represented in its meaning.

***8. Conclusions.***

Summarizing the consideration of this complicated problem, i.e. the processes and mechanisms for creating new meanings through various combinations of both language signs among themselves, as well as the transformation of the meanings of ready-made signs, etc., it should be noted that this issue began to be solved in the structural linguistics, which initiated the development of the theory of valency and the theory of distribution. Developing in parallel, these two directions of syntagmatics caused a lot of discussions on the correlation of these notions with each other, as well as with the term of compatibility. In the end, it was assumed that these categories are in the relations of inclusion, cohesion and interdependence and they represent two aspects of combinatorial syntagmatics: language that is more typical for valency and speech – mainly for distribution. A new cognitive view on the essence of both valency and distribution gives all the fundamentals to argue that both notions in the broader sense are the cognitive categories that reflect the ability of native speakers of a particular language to associate certain language signs in a specific communicative situation, usually called the context. The further development of this problem was reflected in the work of representatives of compositional semantics, who first focused their attention on studying the relationship between configurations of components of complex signs. A new stage in the development of combinatorial syntagmatics began because of the development of the theory of conceptual integration of J. Fauconnier and M. Turner. According to it the creation of new meanings by the configuration of language signs occurs in the system of mental spaces of a person connected with the comprehension of various situations and having a cognitive status, i.e. with the process of cognition of the phenomena of the surrounding reality.

***R e f e r e n c e s***

Abraham, W. (2017). Paradigmatics precedes syntagmatics in language evolution? *Word Structure*. 10. 1. 100–120. https://doi.org/10.3366/word.2017.0102

Akhmanova, O. S. (2007). Sochetayemost [Combinability]. *Slovar lingvisticheskikh terminov*. 4 izd., stereotip. M. : KomKniga. 576.

Barri, N. (1975). Nucleus And Satellite In Nominal Syntagmatics. *Linguistics*. 157. 67–85.

Berezovska-Savchuk, N. A. (2016). *Dystrybutyvni kharakterystyky predykativ stanu v ukrayins'kiy literaturniy movi* [Distributive characteristics of state predicates in the Ukrainian literary language]: [monohrafiya]. Kryvyy Rih: FOP Marynchenko S. V. 157.

Boguslavskiy, I. M. (1996). *Sfera deystviya leksicheskikh yedinits* [The scope of lexical units]. M. : Shkola “Yazyki russkoy kultury”. 464.

Chomsky, N. (1982). *Some concepts and consequences of the theory of government and binding.* MA: The MIT Press. 96.

Dyachkova I. Ye. (2014). Kompozitsionnaya semantika angliyskikh frazeologicheskikh yedinits s komponentom-antroponimom [Compositional semantics of English phraseological units with an anthroponym component]. *Vestnik MGLU*. 20(706). 155–167.

Eger, S. (2012). The Combinatorics of String Alignments: Reconsidering the Problem. *Journal of Quantitative Linguistics*. 19. 1. 32–53. https://doi.org/10.1080/09296174.2011.638792

Fauconnier, G. (1998). *Mental Spaces: Aspects of meaning Construction in Natural Language*. Cambridge: Cambridge Univ. Press. 190.

Fauconnier, G., Turner, M. (2003). *The way we think: conceptual blending and the mind's hidden complexities*. Basic Books. 464.

Fesenmeier, L. (2002). French synonymy in the area of conflict between paradigmatics and syntagmatics. *Zeitschrift Fur Franzosische Sprache Und Literatur*. 112. 2. 177–181.

Fillmore Ch. (1981). Delo o padezhe otkryvayetsya vnov [The case of the case opens again]. *Novoye v zarubezhnoy lingvistike*. M. : Progress. 10. Lingvisticheskaya semantika. 496–530.

Gak, V. G. (1977). Problem Of Semantic Syntagmatics. *Linguistics*. 185. 27–55.

Gak, V. G. (1998). *Yazykovyye preobrazovaniya* [Language conversions]. M. : Shkola "Yazyki russkoy kultury". 768.

Glison, G. (1959). *Vvedeniye v deskriptivnuyu lingvistiku* (per. s angl.) [Introduction to descriptive linguistics]. M. : Izd-vo inostrannoy literatury. 339.

Hanks, P. (2004). The syntagmatics of metaphor and idiom. *International Journal of Lexicography*. 17. 3. 245–274. https://doi.org/10.1093/ijl/17.3.245

Hanks, P. (2007). Preference Syntagmatics. *Words and Intelligence II: Essays In Honor of Yorick Wilks.* 36. 119–135.

Hjelmslev, L. (1960). *Prolegomeny k teorii yazyka* [Prolegomena to Language Theory]. *Novoye v lingvistike*. M. : Izdatelstvo inostrannoy literatury. 1. 264–389.

Ispiryan, A. V. (2012). Sochetayemost v nauchnom modelirovanii [Compatibility in scientific modelling]. *Sovremennaya filologiya: teoriya i praktika*. M. : Izd. "Spetskniga". 74–75.

Ivanytska, N. B. (2011). *Diyeslivni systemy ukrayinskoyi ta anhliyskoyi mov paradyhmatyka i syntahmatyka* [Bilingual systems of Ukrainian and English language paradigm and syntagmatics]. Vinnytsya: SPD Hlavatska. 636.

Karelskaya, I. M. (1988). Terminy "sochetayemost", "valentnost", "distributsiya", "sintagmatika" v nauchnoy i uchebnoy literature [The terms "compatibility", "valency", "distribution", "syntagmatics" in the scientific and educational literature]. *Terminy v nauchnoy i uchebnoy literature*. Gorkiy: Izd-vo Gorkovskogo gosudarstvennogo universiteta. 40–47.

Katsnelson, S. D. (1948). O grammaticheskoy kategorii [On the grammatical category]. *Vestnik Leningradskogo universiteta*. 2. 114–134.

Katsnelson, S. D. (1972). *Tipologiya yazyka i rechevoye myshleniye* [The typology of language and speech thinking]. L. : Nauka. 213.

Katsnelson, S. D. (1978). *K ponyatiyu tipov valentnosti* [On the notion of types of valency]. *Voprosy yazykoznaniya*. 3. 20–32.

Katsnelson, S. D. (2001). *Kategorii yazyka i myshleniya: Iz nauchnogo naslediya* [Categories of language and thinking: from the scientific heritage]. M. : Yazyki slavyanskoy kultury. 864.

Kecskes, I. (2004). Lexical merging, conceptual blending, cultural crossing / I. Kecskes. *Intercultural Pragmatics*. 1. 1. 1–26.

Kocherhan, M. P. (1980). Slovo i kontekst [The Word and Context]. Lviv: Vyshcha shkola. 184.

Kubryakova, Ye. S. (2002b). Kompozitsionnaya semantika: tseli i zadachi [Compositional semantics: goals and objectives]. *Kompozitsionnaya semantika*. Tambov: Izd-vo Tambov. gos. un-ta im. G. R. Derzhavina. 1. 4–6.

Kubryakova, Ye. S. (2002f). Kognitivnaya lingvistika i problemy kompozitsionnoy semantiki v sfere slovoobrazovaniya [Cognitive linguistics and problems of compositional semantics in the sphere of word formation]. *Izv. AN SSSR. Ser. lit. i yaz*. 61. 1. 13–24.

Kubryakova, Ye. S. (2004). *Yazyk i znaniye: Na puti polucheniya znaniy o yazyke: chasti rechi s kognitivnoy tochki zreniya. Rol yazyka v poznanii mira* [Language and knowledge: on the way of getting knowledge on the language: parts of speech from the cognitive point of view. The role of language in the knowledge of the world]. M. : Yazyki slavyanskoy kultury. 560.

Lehmann, W. (1974). *Proto-Indo-European Syntax*. London: Routledge. 671.

Lopatina, T. Yu. (2006). Kompozitsionnaya semantika konstruktsiy N + N kak rezultat integratsii mentalnykh prostranstv [Compositional semantics of N + N constructions as a result of the integration of mental spaces]. *Vestnik NGU. Seriya: Lingvistika i mezhkulturnaya kommunikatsiya*. 4. 2. 170–176.

Lotman, Yu. M. (1996). Vnutri myslyashchikh mirov: chelovek – tekst – semiosfera – istoriya [Inside the thinking worlds: man – text – semiosphere – history]. M. : "Yazyki russkoy kultury". 464.

Lyubovskaya, O. L. (2018). Classification of semantic relations of the two-step epithet's components in paradigmatic and syntagmatic aspects. *Vestnik Volgogradskogo Gosudarstvennogo Universiteta-Seriya 2-Yazykoznanie.* 17. 1. 115–123. https://doi.org/10.15688/jvolsu2.2018.1.12

Melchuk, I. A. (1999). *Opyt teorii lingvisticheskikh modeley "Smysl – Tekst": Semantika, sintaksis* [Experience of the theory of linguistic models "Meaning – Text": semantics, syntax]. M. : Shkola "Yazyki russkoy kultury". 346.

Pinkal, M. (1977). *Kontext und Bedeutung* [Context and meaning]. Türingen: Volk und Wissen. 168.

Rebrina, L. N., Shamne, N. L., Milovanova, M. V., Terentyeva, E. V. (2017). Verbal Collocations of Memory: Functional-Semantic and Lexicographic Aspects. *Proceedings of the 7th International Scientific and Practical Conference "Current Issues Of Linguistics And Didactics: The Interdisciplinary Approach In Humanities" (Cildiah 2017)*. 97. 239–245.

Schmidt, W. (1967). *Lexikalische und aktuelle Bedeutung* [Lexical and current meaning]. Berlin: Akademie - Verlag. 130.

Semenyuk, M. P. (1977). Urovni issledovaniya valentnosti [Valency study levels]. *Leksiko-grammaticheskaya sochetayemost v germanskikh yazykakh*. Chelyabinsk. 2. 111–115.

Serrano, M. P. (2015). How do the reference and curricular documents treat lexical combinatorics? The case of the Common European Framework of Reference and the Cervantes Institute Curriculum. *Revista de Investigacion Linguistica*. 18. 213–232.

Stepanova, M. D., Khelbig, G. (1978). *Chasti rechi i problema valentnosti v sovremennom nemetskom yazyke* [Parts of speech and the problem of valency in modern German]. M. : Vysshaya shkola. 260.

Sternin, I. A. (1979). Problemy analiza struktury znacheniya slova [Problems of analyzing the structure of the meaning of the word]. Voronezh: Izd-vo Voronezhskogo universiteta. 155.

Sweetser, E. (1999). Compositionality and Blending. Semantic Composition in a Cognitively Realistic Framework. *Cognitive Linguistics: Foundations, Scope, and Methodology*. N. Y. 129–162.

Tenier, L. (1988). *Osnovy strukturnogo sintaksisa* [The Basics of Structural Syntax]. M. : Progress. 654.

Turner, M., Fauconnier G. (1995). Conceptual Integration and Formal Expression. *Journal of Metaphor and Symbolic activity*. 10. 3. 183–204.

Vinogradov, V. V. (2001). *Russkiy yazyk: grammaticheskoye ucheniye o slove* [The Russian language: grammatical doctrine of the word]: [ucheb. posobiye]. 4 izd. M. : Russkiy yazyk. 720.

Vlavatskaya, M. V. (2011). Ponyatiye distributsii v otechestvennoy i zarubezhnoy lingvistike [The notion of distribution in domestic and foreign linguistics]. *Filologicheskiye nauki. Voprosy teorii i praktiki*. 1(8). 39–43.

Vlavatskaya, M. V. (2012) Valentnost kak potentsial yazykovoy sintagmatiki: leksikograficheskiy aspect [Valence as a potential of linguistic syntagmatics: lexicographic aspect]. *Filologicheskiye nauki. Voprosy teorii i praktiki*. 1(12). 46–51.

Vlavatskaya, M. V. (2013). *Teoreticheskiye osnovy kombinatornoy lingvistiki: leksikologicheskiy i leksikograficheskiy aspekty (na materiale russkogo i angliyskogo yazykov)* [Theoretical bases of combinatorial linguistics: lexicological and lexicographic aspects (on the material of Russian and English languages)]: Doctoral Thesis. Kemerovo. 51.

Vsevolodova, M. V. (2000). *Teoriya funktsionalno-kommunikativnogo sintaksisa. Fragment prikladnoy (pedagogicheskoy) modeli yazyka* [Theory of functional-communicative syntax. Fragment of the applied (pedagogical) language model]: [uchebnik]. M. : Izd-vo MGU. 502.

Zalevskaya, A. A. (2004). Kontseptualnaya integratsiya kak bazovaya mentalnaya operatsiya [Conceptual integration as a basic mental operation]. *Slovo i tekst: Psikholingvisticheskiy podkhod.* Tver. 2. 56–71.

**Бібліографічний опис:**

Корольова, А. В. (2018). Комбінаторна синтагматика: від теорії валентності до теорії концептуальної інтеграції. *Науковий часопис Національного педагогічного університету імені М. П. Драгоманова. Серія 9. Сучасні тенденції розвитку мов.* К. Вип. 17. С. 99–111. DOI: https://doi.org/10.31392/NPU-nc.series9.2018.17.08

***Анотація***

*У статті розглядається актуальна і складна проблема сучасної лінгвістики, пов'язана з вивченням процесів і механізмів творення нових смислів шляхом різних комбінацій як мовних знаків між собою, так і трансформації значень уже готових знаків, яку почали вирішувати ще у структурній лінгвістиці представники теорії валентності й теорії дистрибуції. Зроблено висновок про те, що,*

*розвиваючись паралельно як два напрями синтагматики, і теорія валентності, і теорія дистрибуції викликали чимало дискусій щодо їхнього співвідношення між собою, а також із поняттям сполучуваності загалом. При цьому вказано, що з часом науковці дійшли згоди і заявили, що обидві категорії перебувають у відношеннях взаємозумовленості й становлять два рівні комбінаторної синтагматики: мовний рівень, характерний більше для валентності, і мовленнєвий, – переважно – для дистрибуції. Особливу увагу приділено новому когнітивному погляду на сутність і валентності, і дистрибуції, який дозволяє припустити, що обидва поняття в широкому розумінні є когнітивними категоріями, що відображають здатність носіїв конкретної мови пов'язувати (поєднувати) певні мовні одиниці в конкретній ситуації спілкування, тобто у контексті. Показано, що досліджувана проблематика знайшла відображення в роботах представників композиційної семантики, які спершу були зорієнтовані на аналіз відношень між конфігураціями компонентів комплексних знаків із когнітивного погляду. Наведено аргументи для обґрунтування нового етапу розвитку комбінаторної синтагматики, що розробляється послідовниками теорії концептуальної інтеграції Ж. Фоконьє і М. Тернера, згідно з якою творення нових смислів шляхом конфігурації мовних знаків відбувається в системі ментальних просторів – мисленнєвих сфер (когнітивних контекстів, відображених у свідомості носіїв конкретної мови), які відображають осмислення людиною різних ситуацій і мають когнітивний статус, тобто процеси пізнання явищ навколишньої дійсності.*

***Ключові слова:*** *теорія валентності, теорія дистрибуції, комбінаторна синтагматика, конфігурація мовних знаків, композиційна семантика, теорія концептуальної інтеграції.*

**DOI:** https://doi.org/10.31392/NPU-nc.series9.2018.17.09
**UDC:** 81'42:81'115

**Nataliya Ye. Lemish**
National Pedagogical Dragomanov University, Kyiv, Ukraine

# INTRALINGUAL PROTOTYPICAL FEATURES OF CAUSAL DOMINANTS IN RELATED LANGUAGES

**Bibliographic Description:**

Lemish, N. Ye. (2018). Intralingual Prototypical Features of Causal Dominants in Related Languages. *Scientific Journal of National Pedagogical Dragomanov University. Series 9. Current Trends in Language Development*. K. 17. 112–134. DOI: https://doi.org /10.31392/NPU-nc.series9.2018.17.09

***Abstract***

*The paper deals with defining the intralingual prototypical features of causal dominants in English, Dutch, Spanish, Ukrainian, and Russian, being the languages of our research. The objective is achieved through solving such tasks as specifying the notion of "a prototype" and "a prototypical feature", identifying causal sememes for all the causal dominants in related languages under study, and assigning semantic roles to all the elements of causal sememes identified. The employment of the following linguistic methods made it possible to fulfil all the tasks, namely: a contrastive method to select a causal sememe as tertium comparationis with further identification and contrasting of prototypical features on its basis; a structural method with componentional analysis of each causal dominant based on dictionary definitions; a cognitive method to model chains of semantic roles for each causal dominant. The combination of methods enabled modelling of three major chains, such as: [Ag +/ Eff + CAUSE + Pat +/ Rec +/ Instr]; [Ag +/ Eff + $BE_1$ + Pat +/ Rec +/ Instr]; [Ag +/ Eff + $BE_2$ + Pat +/ Rec +/ Instr].*

*The analysis of 1115 causal sememes identified based on the data from 24 dictionaries of 5 languages revealed the prototypical features for 10 causal dominants in English, Dutch, Spanish, Ukrainian, and Russian. As a result prototypical features for the English CC include Ag (5), Eff (33), Pat (2), Rec (34); for the Dutch CC – Ag (8), Eff (33), Pat (9), Rec (29); for the Spanish CC – Ag (0), Eff (41), Pat (4), Rec (37); for the Ukrainian CC – Ag (7), Eff (36), Pat (8), Rec (35); for the Russian one – Ag (7), Eff (42), Pat (8), Rec (42).*

*The results obtained for intralingual prototypes in English, Dutch, Spanish, Ukrainian, and Russian can serve as the basis for further identification of intralingual prototypes in the other languages, as well as defining crosslingual prototypes of the causal dominants in related languages, showing the universal and specific in mapping the phenomena of causal reality by different ethnic groups.*

***Keywords****: intralingual, prototype, prototypical feature, causal dominant, causal sememe, tertium comparationis, semantic role.*

## *1. Introduction.*

Having been in the focus of multidisciplinary studies for more than two thousand years (from Aristotle, 4 c. BC), causality is unanimously recognized as both a phenomenon of reality and a category. The scientific works by I. Davyidov (Davyidov 1853), A. Komarov (Komarov 1970), T. Shubina (Shubina 1986) determined the possibility of considering the

whole set of causal relationships within the frame of one and the same Causal Complex (hereinafter CC). Further development of this idea enabled us to establish five (5) pairs of causal relations (cause – effect, reason – conclusion, condition – result, concession – consequence, and purpose – means) respectively represented by ten causal dominants (hereinafter CD): *cause, reason, condition, concession, purpose, effect, conclusion, result, consequence, means* (Lemish 2012, 2014, 2015). Moreover we define CC as a product of conceptualization and categorization, that is an ontological and epistemological unit, which represents the causal fragment of objective and subjective reality in the form of the mental and logical construct in human consciousness (Lemish 2014: 107–108). That is why an individual CC is always a subject to limitation and interpretation by the speaker.

It is obvious that the most important results which linguistic studies can give, are always connected with practical application, including teaching foreign languages, translation studies, intercultural communication. All of those applied areas are based on common and specific features of different languages. The best basis for establishing such universal and divergent characteristics is provided by the contrastive approach to the language data analysis (Dzheyms 1989; Gak 1989; Kocherhan 2006; Ksheshovskiy 1989; Shternemann 1989, etc.), tha major procedure of which is *tertium comparationis* selection. It is an adequate tertium comparationis that makes the obtained results objective and reliable.

As soon as our research of the causality category was based on the theory of archetypes (Koduhov 2013; Levytskyi 2008; Otkupschikov 2005; Pizani 1956; Selivanova 2010; Toporov 1990; Trubachev 1976; Yung 1991) and the theory of prototypes (Furs 2004; Johnson, Lakoff 1980/1981; Polev 2009; Rosch 1978; Wierzbicka 1996), we followed the idea of L. Furs (Furs 2004), Z. Popova (Popova 2008), and G. Volohina (Popova, Volohina 1999), who had provided the reasoning for the expediency of studying the fundamental language phenomena, and categories (causation inclusive – which is interpreted by us more widely as causality) by means of syntactic concepts (hereinafter SC). SC is understood as a unit of cognitive syntax with a plane of content (= a proposition / a sememe) and a plane of expression (= a structural scheme) (for more details see Lemish 2014; 2015). Taking into account the fact that any CD is represented with the set of causal sememes (identified based on the data from various dictionaries), it is possible to choose a causal sememe as *tertium comparationis* for contrasting causal prototypes not only in different languages but also within one language to show common intralingual causal sememes for different CDs.

***2. Aim and Objectives.***

The aim of the present paper is to define the intralingual prototypical features of CDs in English, Dutch, Spanish, Ukrainian, and Russian, being the laguages of our research. It can be achieved through solving such objectives as follows: 1) specifying the notion of *a prototype* and *a prototypical feature*; 2) identifying causal sememes for all the CDs in studied languages; 3) assigning a semantic role to each element of every causal sememe.

The objective can be achieved with employment of the following linguistic methods: a contrastive one (selection of a causal sememe as *tertium comparationis* and further identifying and contrasting prototypical features on its basis), a structural one with componentional analysis of each CD based on dictionary definitions, a cognitive one with modelling chains of semantic roles for each CD.

Th actual language data for the research were taken from 24 dictionaries given as *Lexicographic Sources* at the end of this paper.

***3. Intralingual Prototypes for Causal Dominants in English, Dutch, Spanish, Ukrainian and Russian.***

When identifying the causal sememes for the dominants of CC from different dictionaries of the English, Dutch, Spanish, Ukrainian, and Russian languages, the

recurrence (< Lat. *recurrens*, Gen. *recurrentis* – "returning, repeated") of certain differential types was noticed. Thus we came to the conclusion that such recurrent items could serve as the basis for the identification of prototypical features (prototypes) of the CDs in related languages under study, as *prototypical* within our research is considered to be the most obvious (outstanding) sample of a certain unit. In support to this approach O. Selivanova, following E. Rosch (Rosch 1978), calls "the prototype as the point of cognitive reference that embodies the most distinct features of the category as a part / section of experience […]" (Selivanova 2010: 379). According to N. Slukhai, the prototype belongs to the "most typical, major representative" of the category (Slukhai 2011: 304). Therefore, the prototypical features of the dominants of CC were distinguished on the basis of recurrent differential types of causal sememes. Moreover, every component of the causal sememe identified was assigned with the corresponding semantic role with the aim to make contrasting relevant in all five studied languages.

Sharing the point of view of G. Lakoff, M. Johnson (Lakoff, Johnson 1980/1981) and L. Furs (Furs 2004), we identified the following major prototypical features of causality (CDs): *an agent* (Ag – initiating and controlling the situation) and *a patient* (Pat – whose emotional / physical condition changes under the influence of the agent / effector, including movement in space). In addition, following R. Van Valin (Van Valin 1993; 2001), and A. Kibrik (Kibrik 2004), it was possible to determine *an effector* (Eff – a so-called instrument-mediator, able to take the position of the subject, triggering the situation with no control), as well as *a recipient* (Rec – an inanimate participant, condition of which is modified during the situation process), *an instrument* (Instr – used by one party to change the physical / emotional condition of the other). Latin abbreviations for the corresponding lexical items have been used: Ag (Agens), Eff (Effector), Pat (Patiens), Rec (Recipiens), Instr (Instrumentum).

Considering the fact that any causal situation consists of at least two events (antecedent + consequent) it seems reasonable to introduce three "predicates over events" (the term of R. Van Valin): 1) CAUSE (for verbal causality), 2) $BE_1$ (*be cause of* – for nominal causality, introducing the consequent), 3) $BE_2$ (*be effect of* – for nominal causality, introducing the antecedent).

Before presenting the results of our research it should be mentioned that CC is represented in different languages with the CDs nominations. In the studied languages the latter include such lexemes as: (Eng.) *cause, reason, condition, concession, purpose, effect, conclusion, result, consequence, means*; (Ned.) *oorzaak, reden, conditie / voorwaarde, concessie / tegemoetkoming, doel, effect, conclusie, resultaat, gevolg / consequentie, middel*; (Esp.) *causa, razón, condición, concesión, fin / final, efecto, conclusión, resulta / resultado, consecuencia, medio*; (Ua.) *причина, підстава, умова, допуст / поступка, мета / ціль, ефект, висновок / вивід, результат, наслідок, засіб*; (Ru.) *причина, основание, условие, уступка, цель*, *эффект, вывод, результат, следствие, средство*. Although in Dutch (Ned. – 13), Spanish (Esp. – 12), Ukrainian (Ua. – 13) there are more than 10 nominations, the results are presented in 10 sections related to each of 10 CDs, but not separate nominations.

***3.1. Intralingual Prototypical Features of the Causal Dominant CAUSE.***

For the CD ***cause*** in the English language, the following recurrent types of the causal sememes have been determined (CED 2011: 117; Hornby 2010: 224; LDCE 2012: 255; NWDTEL 1993: 156; SOED 1956: 278) (NB: hereinafter we give the wording of every identified causal sememe in capital letters <all the verbs are in their infinitival forms>, then we provide translation into English of the wordings of sememes for all languages but

English, afterwards we indicate the number of times every sememe occurs, and only then the semantic roles as prototypical features are assigned):

SMTH TO PRODUCE SMTH ELSE (AN EFFECT) (2 times) – [Eff + CAUSE + Rec];

SMTH TO BE GROUNDS FOR SMTH ELSE (2 times) – [Eff + $BE_1$ + Rec];

SMTH TO BE A REASON FOR SMTH (2 times) – [Eff + $BE_1$ + Rec];

SMTH TO LEAD TO SMTH ELSE (2 times) – [Eff + CAUSE + Rec];

SMB TO MAKE SMTH HAPPEN (2 times) – [Ag + CAUSE + Rec];

SMTH TO MAKE SMTH ELSE HAPPEN (2 times) – [Eff + CAUSE + Rec];

SMTH TO BE SUPPORTED BY SMB (3 times) – [Ag + CAUSE + Rec];

SMTH TO BE FOUGHT BY SMB (2 times) – [Ag + CAUSE + Rec].

Consequently, the prototypical features for the CD ***cause*** in the English language are: **Ag** (3), **Eff** (5), **Rec** (8).

For the CD ***oorzaak*** in the Dutch language (EWN 2007 III: 468; MNW URL: http://nl.wikipedia.org/wiki/Middelnederlandsch_Woordenboek; VD 1976: 1692; WFT URL: http://gtb.inl.nl/; WNT URL: http://en.wikipedia.org/wiki/Woordenboek_der_Nederlandsche_Taal) the following recurrent types have been identified:

IETS IETS ANDERS MET ZICH MEE BRENGEN / something to cause something else (something to bring a certain consequence / result (necessarily)) (2 times) – [Eff + CAUSE + Rec];

IETS DE AANLEIDING VAN IETS ANDERS ZIJN / something to be the motive for something else (2 times) – [Eff + $BE_1$ + Rec];

IEMAND DE OORSPRONG VAN IETS ZIJN / someone to be the source of something (2 times) – [Ag + CAUSE + Rec].

Thus, the prototypical features for the CD ***oorzaak*** in the Dutch language are: **Ag** (1), **Eff** (2), **Rec** (3).

For the CD ***causa*** in the Spanish language (DE URL: http://es.thefreedictionary.com/chabola; DLE URL: http://www.rae.es/publicaciones/obras-academicas/diccionarios-de-la-real-academia-espanola; DMLE *2007* URL: http://es.thefreedictionary.com/chabola; DSA URL: http://lenguaje.com/cgi-bin/Thesauro.exe?edition_field= causa&B1 =Buscar; Moliner 1992 I: 560–561) the following recurrent types have been revealed:

ALGO CONSIDERARSE COMO FUNDAMENTO DE ALGO MÁS / something to be considered as the basis for something else (2 times) – [Eff + $BE_1$ + Rec];

ALGO CONSIDERARSE COMO ORIGEN DE ALGO MÁS / something to be considered the source of origin of something else (2 times) – [Eff + $BE_1$ + Rec];

ALGO SER MOTIVO PARA ALGO MÁS / something to be the motive for something else (5 times) – [Eff + $BE_1$ + Rec];

ALGO SER RAZÓN PARA ALGO MÁS / something to be grounds for something else (4 times) – [Eff + $BE_1$ + Rec];

ALGO PRODUCIR ALGO MÁS / something to produce something else (2 times) – [Eff + CAUSE + Rec];

ALGO SER ORIGEN DE ALGO MÁS / something to be the source of origin of something else (2 times) – [Eff + $BE_1$ + Rec].

Consequently, the prototypical features for the CD ***causa*** in the Spanish language are: **Eff** (6), **Rec** (6).

For the CD ***причина*** in the Ukrainian language (VTSSUM 2001: 957; HSUM 1997 III: 452; ESUM 2003 4: 583–584; Poliuha 2007; SUM 1977 8: 971) the following recurrent types have been determined:

ЩОСЬ ОБУМОВЛЮВАТИ ЩОСЬ ІНШЕ / something to condition something else (2 times) – [Eff + CAUSE + Rec];

ЩОСЬ ПОРОДЖУВАТИ ЩОСЬ ІНШЕ / something to produce something else (3 times) – [Eff + CAUSE + Rec];

ЩОСЬ БУТИ ПІДСТАВОЮ ДЛЯ ЧОГОСЬ ІНШОГО / something to be the ground for something else (3 times) – [Eff + $BE_1$ + Rec];

ЩОСЬ БУТИ ПРИВОДОМ ДЛЯ ЧОГОСЬ ІНШОГО / something to be the reason for something else (2 times) – [Eff + $BE_1$ + Rec];

ЩОСЬ БУТИ НЕЩАСТЯМ ДЛЯ КОГОСЬ / something to be a misfortune for someone (2 times) – [Eff + $BE_1$ + Pat];

ХТОСЬ БУТИ ПРОВИНОЮ ЧОГОСЬ / someone to be guilty in something (2 times) – [Ag + $BE_1$ + Rec];

ХТОСЬ БУТИ ВИНОЮ ЧОГОСЬ / someone to be a fault of something (2 times) – [Ag + $BE_1$ + Rec];

ЩОСЬ БУТИ НАВЕДЕНОЮ ХВОРОБОЮ НА КОГОСЬ / something to be a disease imposed on someone (3 times) – [Eff + $BE_1$ + Pat];

ЩОСЬ БУТИ ПРИЧИНОЮ ЧОГОСЬ / something to be a cause of something (2 times) – [Eff + $BE_1$ + Rec];

ХТОСЬ БУТИ ПРИЧИНОЮ ЧОГОСЬ / someone to be a cause of something (2 times) – [Ag + $BE_1$ + Rec].

Therefore, the prototypical features for the CD ***причина*** in the Ukrainian language are: **Ag** (3), **Eff** (7), **Pat** (2), **Rec** (8).

For the CD ***причина*** in the Russian language (BTSRYa 1998; Efremova 2006 URL: http://www.slovotolk.ru/efr44532.html; Ozhegov 1990: 601; TSRYa URL: http://feb-web.ru/feb/ushakov/ush-abc/0ush.htm; CCRLYa: 1948–1965) the following recurrent types have been defined:

ЧТО-ТО ОБУСЛОВЛИВАТЬ ЧТО-ТО ДРУГОЕ / something to condition something else (3 times) – [Eff + CAUSE + Rec];

ЧТО-ТО БЫТЬ ОСНОВАНИЕМ ДЛЯ ЧЕГО-ТО ДРУГОГО / something to be grounds for something else (5 times) – [Eff + $BE_1$ + Rec];

ЧТО-ТО БЫТЬ ПОВОДОМ ДЛЯ ЧЕГО-ТО ДРУГОГО / something to be a motive for something else (4 times) – [Eff + $BE_1$ + Rec];

ЧТО-ТО БЫТЬ ПРЕДЛОГОМ ДЛЯ ЧЕГО-ТО ДРУГОГО / something to be a pretext for something else (5 times) – [Eff + $BE_1$ + Rec];

ЧТО-ТО СЛУЖИТЬ ОСНОВАНИЕМ ЧЕГО-ТО ДРУГОГО / something to serve as grounds for something else (2 times) – [Eff + $BE_1$ + Rec];

КТО-ТО БЫТЬ ВИНОВНИКОМ ЧЕГО-ТО / someone to be guilty in something (2 times) – [Ag + $BE_1$ + Rec].

Consequently, the prototypical features for the CD ***причина*** in the Russian language are: **Ag** (1), **Eff** (5), **Rec** (6).

Thus, the major prototypical features for the CD *CAUSE* in related languages under our study are as follows: **Ag**, **Eff**, **Pat**, **Rec,** namely: **(**Eng.) **Ag** (3), **Eff** (5), **Rec** (8); (Ned.) **Ag** (1), **Eff** (2), **Rec** (3); (Esp.) **Eff** (6), **Rec** (6); (Ua.) **Ag** (3), **Eff** (7), **Pat** (2), **Rec** (8); (Ru.) **Ag** (1), **Eff** (5), **Rec** (6).

***3.2. Intralingual Prototypical Features of the Causal Dominant REASON.***

For the CD ***reason*** in the English language [CED 2011: 661; Hornby 2010: 1211–1212; LDCE 2012: 1448–1449; NWDTEL 1993: 832; SOED 1956: 1667] the following recurrent types have been determined:

SMTH TO BE A GROUND FOR SMTH ELSE (2 times) – [Eff + $BE_1$ + Rec];

SMTH TO BE A MOTIVE FOR SMTH ELSE (2 times) – [Eff + $BE_1$ + Rec];

SMTH TO BE A CAUSE OF SMTH ELSE (2 times) – [Eff + $BE_1$ + Rec];

SMTH TO BE A CAUSE FOR SMTH ELSE (3 times) – [Eff + $BE_1$ + Rec].

Therefore, the prototypical features for the CD ***reason*** in the English language are: **Eff** (4), **Rec** (4).

For the CD ***reden*** in the Dutch language [EWN 2007 III: 637; MNW URL: http://nl.wikipedia.org/wiki/Middelnederlandsch_Woordenboek; VD 1976: 2009; WFT URL: http://gtb.inl.nl/; WNT URL: http://en.wikipedia.org/wiki/Woordenboek_der_Nederlandsche_Taal] the following recurrent types have been determined:

IETS ZIJN GROND VOOR IETS ANDERS / something to be a ground for something else (5 times) – [Eff + $BE_1$ + Rec];

IETS ZIJN MOTIEF VOOR IETS ANDERS / something to be a motive for something else (2 times) – [Eff + $BE_1$ + Rec];

IETS ZIJN DE OORZAAK VAN IETS ANDERS / something to be a cause of something else (3 times) – [Eff + $BE_1$ + Rec];

IETS ZIJN DRIJFVEER VOOR IETS ANDERS / something to be an incentive for something else (2 times) – [Eff + $BE_1$ + Rec];

IETS ZIJN BEWEEGREDEN VOOR IETS ANDERS / something to be a stimulus for something else (2 times) – [Eff + $BE_1$ + Rec].

Hence, the prototypical features for the CD ***reden*** in the Dutch language are: **Eff** (5), **Rec** (5).

The CD ***razón*** in the Spanish language (DE URL: http://es.thefreedictionary.com/chabola; DLE URL: http://www.rae.es/publicaciones/obras-academicas/diccionarios-de-la-real-academia-espanola; DMLE *2007* URL: http://es.thefreedictionary.com/chabola; DSA URL: http://lenguaje.com/cgi-bin/Thesauro.exe?edition_field= causa&B1 =Buscar; Moliner 1992 II: 939) is represented with the following recurrent types of the causal sememes:

ALGO SER ARGUMENTO PARA ALGO MÁS / something to be an argument for something else (3 times) – [Eff + $BE_1$ + Rec];

ALGO SER MOTIVO PARA ALGO MÁS / something to be a motive for something else (2 times) – [Eff + $BE_1$ + Rec];

ALGO SER MOTIVO DE ALGO MÁS / something to be a motive of something else (4 times) – [Eff + $BE_1$ + Rec];

ALGO SER CAUSA DE ALGO MÁS / something to be a cause of something else (6 times) – [Eff + $BE_1$ + Rec];

ALGO SER EXPLICACIÓN PARA ALGO MÁS (demostrar o justificar) / something to be an explanation for something else (to demonstrate or justify) (2 times) – [Eff + $BE_1$ + Rec];

ALGO EXISTIR PARA HACER ALGO MÁS / something to exist to do something else (2 times) – [Eff + $BE_1$ + Rec];

ALGO EXISTIR PARA JUSTIFICAR ALGO MÁS / something to exist to justify something else (3 times) – [Eff + $BE_1$ + Rec].

Hence, the prototypical features for the CD ***razón*** in the Spanish language are: **Eff** (7), **Rec** (7).

For the CD ***підстава*** in the Ukrainian language (VTSSUM 2001; HSUM 1997 III; ESUM; Poliuha 2007; SUM 1975 6: 505–506) no recurrent types have been revealed.

For the CD ***основание*** in the Russian language (BTSRYa 1998; Efremova 2006 URL: http://www.slovotolk.ru/efr44532.html; Ozhegov 1990: 461; TSRYa URL: http://feb-

web.ru/feb/ushakov/ush-abc/0ush.htm; CCRLYa: 1948–1965) the following recurrent types have been identified:

ЧТО-ТО БЫТЬ ИСТОЧНИКОМ ЧЕГО-ТО ДРУГОГО / something to be a source for something else (2 times) – [Eff + $BE_1$ + Rec];

ЧТО-ТО ПОЗВОЛЯТЬ ДЕЛАТЬ ЧТО-ТО ДРУГОЕ / something to allow to do something else (2 times) – [Eff + CAUSE + Rec];

ЧТО-ТО БЫТЬ ПРИЧИНОЙ ЧЕГО-ТО ДРУГОГО / something to be a cause of something else (4 times) – [Eff + $BE_1$ + Rec];

ЧТО-ТО БЫТЬ ПОВОДОМ ДЛЯ ЧЕГО-ТО ДРУГОГО / something to be a reason for something else (2 times) – [Eff + $BE_1$ + Rec];

ЧТО-ТО ОПРАВДЫВАТЬ ЧТО-ТО ДРУГОЕ / something to justify something else (4 times) – [Eff + CAUSE + Rec];

ЧТО-ТО ОБЪЯСНЯТЬ ЧТО-ТО ДРУГОЕ (ДЕЛАТЬ ЕГО ПОНЯТНЫМ) / something to explain something else (to make it clear) (2 times) – [Eff + CAUSE + Rec];

ЧТО-ТО ДЕЛАТЬ ПОНЯТНЫМ ЧТО-ТО ДРУГОЕ / something to make clear something else (2 times) – [Eff + CAUSE + Rec].

Therefore, the prototypical features for the CD ***основание*** in the Russian language are: **Eff** (7), **Rec** (7).

Hence, the main prototypical features for the CD *REASON* are as follows: **Eff** і **Rec: (**Eng.) **Eff** (4), **Rec** (4); (Ned.) **Eff** (5), **Rec** (5); (Esp.) **Eff** (7), **Rec** (7); (Ru.) **Eff** (7), **Rec** (7). No recurrent types for the CD *підстава* in the Ukrainian language have been revealed.

***3.3. Intralingual Prototypical Features of the Causal Dominant CONDITION.***

For the CD ***condition*** in the English language (CED 2011: 1578; Hornby 2010: 302; LDCE 2012: 348; NWDTEL 1993: 302; SOED 1956: 364) the following recurrent types have been determined:

SMTH TO BE A PREREQUISITE FOR SMTH ELSE (2 times) – [Eff + $BE_1$ + Rec];

(law) SMTH SMTH ELSE TO DEPEND UPON (2 times) – [Eff + CAUSE + Rec];

SMTH TO AFFECT SMTH ELSE (2 times) – [Eff + CAUSE + Rec];

SMTH TO AFFECT SMB (3 times) – [Eff + CAUSE + Pat];

SMTH TO BE NECESSARY FOR SMTH ELSE TO HAPPEN (2 times) – [Eff + $BE_1$ + Rec].

In general, the prototypical features for the CD ***condition*** in the English language are: **Eff** (5), **Pat** (1), **Rec** (4).

For the ***conditie / voorwaarde*** nominations denoting the CD *CONDITION* in the Dutch language (EWN 2003 I: 476 / 2009 IV: 564; MNW URL: http://nl.wikipedia.org/wiki /Middelnederlandsch_Woordenboek; VD 1976: 466 / 2830; WFT URL: http://gtb.inl.nl/; WNT URL: http://en.wikipedia.org/wiki/Woordenboek_der_Nederlandsche_Taal) the following recurrent types have been determined:

IETS ZIJN VOORWAARDE VOOR IETS ANDERS / something to be a prerequisite for something else (6 times) – [Eff + $BE_1$ + Rec];

IETS ZIJN EEN BEDING VOOR IETS ANDERS / something to be a condition for something else (3 times) – [Eff + $BE_1$ + Rec];

IETS ZIJN BEPALING VOOR IEMAND / something to be a (restrictive) regulation for someone (3 times) – [Eff + $BE_1$ + Pat];

IETS TE VERPLICHTEN AAN IEMAND TE DOEN IETS ANDERS / something to oblige someone to do something else (2 times) – [Eff + CAUSE + Pat];

IETS MOETEN WORDEN VERVULD VOOR IETS ANDERS KAN PLAATS VINDEN / something to be done before something else can happen (something to precede something else) (2 times) – [Eff + CAUSE + Rec];

IETS MOGELIJK MAKEN IETS ANDERS / something to make possible something else (6 times) – [Eff + CAUSE + Rec].

Therefore, the prototypical features for the ***conditie / voorwaarde*** nominations in the Dutch language are: **Eff** (6), **Pat** (2), **Rec** (4).

For the CD ***condición*** in the Spanish language (DE URL: http://es.thefreedictionary.com/chabola; DLE URL: http://www.rae.es/publicaciones/obras-academicas/diccionarios-de-la-real-academia-espanola; DMLE *2007* URL: http://es.thefreedictionary.com/chabola; DSA URL: http://lenguaje.com/cgi-bin/Thesauro.exe?edition_field= causa&B1 =Buscar; Moliner 1992 I: 713) the following recurrent types have been determined:

ALGO DEL QUE ALGO MÁS DEPENDER / something something else to depend upon (2 times) – [Eff + CAUSE + Rec].

Hence, the prototypical features for the CD ***condición*** in the Spanish language are: **Eff** (1), **Rec** (1).

The causal sememes denoting the CD ***умова*** in the Ukrainian language (VTSSUM 2001: 1295; HSUM 1997 IV: 339; ESUM 2012 6: 34; Poliuha 2007; SUM 1979 10: 441) are represented with the following recurrent types:

ЩОСЬ БУТИ НЕОБХІДНОЮ ОБСТАВИНОЮ ДЛЯ ЧОГОСЬ ІНШОГО / something to be a necessary circumstance for something else (2 times) – [Eff + $BE_1$ + Rec];

ЩОСЬ УМОЖЛИВЛЮВАТИ ЗРОБИТИ ЩОСЬ ІНШЕ / something to make it possible to do something else (2 times) – [Eff + CAUSE + Rec];

ЩОСЬ СПРИЯТИ ЧОМУСЬ ІНШОМУ / something to facilitate something else (2 times) – [Eff + CAUSE + Rec];

ЩОСЬ ВПЛИВАТИ НА ЩОСЬ ІНШЕ / something to affect something else (2 times) – [Eff + CAUSE + Rec];

ЩОСЬ ВПЛИВАТИ НА КОГОСЬ / something to affect somebody (2 times) – [Eff + CAUSE + Pat];

ЩОСЬ ЗАБЕЗПЕЧУВАТИ ЩОСЬ ІНШЕ / something to secure something else (2 times) – [Eff + $CAUSE_1$ + Rec].

In general, the prototypical features for the CD ***умова*** in the Ukrainian language are: **Eff** (6), **Pat** (1), **Rec** (5).

For the CD ***условие*** in the Russian language [BTSRYa 1998; Efremova 2006 URL: http://www.slovotolk.ru/efr44532.html; Ozhegov 1990: 837; TSRYa URL: http://feb-web.ru/feb/ushakov/ush-abc/0ush.htm; CCRLYa: 1948–1965] the following recurrent types of the causal sememes have been identified:

ЧТО-ТО ОТ ЧЕГО ЧТО-ТО ДРУГОЕ ЗАВИСЕТЬ / something something else to depend upon (4 times) – [Eff + CAUSE + Rec];

ЧТО-ТО ДЕЛАТЬ ВОЗМОЖНЫМ ЧТО-ТО ДРУГОЕ / something to make it possible to do something else (3 times) – [Eff + CAUSE + Rec];

ЧТО-ТО ОПРЕДЕЛЯТЬ ЧТО-ТО ДРУГОЕ / something to determine something else (3 times) – [Eff + CAUSE + Rec];

ЧТО-ТО ВЛИЯТЬ НА ЧТО-ТО ДРУГОЕ / something to affect something else (5 times) – [Eff + CAUSE + Rec];

ЧТО-ТО ВЛИЯТЬ НА КОГО-ТО / something to affect somebody (9 times) – [Eff + CAUSE + Pat];

ЧТО-ТО ОБУСЛОВЛИВАТЬ ЧТО-ТО ДРУГОЕ / something to condition something else (2 times) – [Eff + CAUSE + Rec].

Therefore, the prototypical features for the CD ***условие*** in the Russian language are: **Eff** (6), **Pat** (1), **Rec** (5).

Hence, the main prototypical features for the CC dominant *CONDITION* are **Eff**, **Pat**, **Rec: (**Eng.) **Eff** (5), **Pat** (1), **Rec** (4); (Ned.) **Eff** (6), **Pat** (2), **Rec** (4); (Esp.) **Eff** (1), **Rec** (1); (Ua.) **Eff** (6), **Pat** (1), **Rec** (5); (Ru.) **Eff** (6), **Pat** (1), **Rec** (5).

***3.4. Intralingual Prototypical Features of the Causal Dominant CONCESSION.***

For the CD ***concession*** in the English language (CED 2011: 1567; Hornby 2010: 300; LDCE 2012: 346; NWDTEL 1993: 202; SOED 1956: 361) only one (1) recurrent type of the causal sememes has been determined:

SMTH TO BE GRANTED FOR SMB (2 times) – [Eff + CAUSE + Pat].

Thus, the prototypical features for the CD ***concession*** in the English language are: **Eff** (1), **Pat** (1).

For the ***concessie / tegemoetkoming*** nominations denoting the CC dominant *CONCESSION* in the Dutch language (EWN 2003 I: 473; MNW URL: http://nl.wikipedia.org/wiki/Middelnederlandsch_Woordenboek; VD 1976: 464 / 2460; WFT URL: http://gtb.inl.nl/; WNT URL: http://en.wikipedia.org/wiki /Woordenboek_der_Nederlandsche_Taal) the following recurrent types have been identified:

IETS IEMAND TOESTAAN IETS ANDERS TE DOEN / something to allow somebody to do something else (3 times) – [Eff + CAUSE + Pat];

IETS WAARMEE IEMAND GEDEELTELIJK TOEGEVEN AAN IEMAND ANDERS / something by which somebody partly to acknowledge the requirements of somebody else (4 times) – [Eff + CAUSE + Pat].

Generally, the prototypical features for the ***concessie / tegemoetkoming*** nominations in the Dutch language are: **Eff** (2), **Pat** (2).

The CD ***concesión*** in the Spanish language (DE URL: http://es.thefreedictionary.com/chabola; DLE URL: http://www.rae.es/publicaciones/obras-academicas/diccionarios-de-la-real-academia-espanola; DMLE *2007* URL: http://es.thefreedictionary.com/chabola; DSA URL: http://lenguaje.com/cgi-bin/Thesauro.exe?edition_field= causa&B1 =Buscar; Moliner 1992 I: 705) is represented with the following recurrent types of the causal sememes:

ALGO CEDER A ALGIEN POR ALGO MÁS / something to let somebody have something else (2 times) – [Eff + CAUSE + Pat];

ALGO CONCEDER A ALGIEN / something to let somebody have (2 times) – [Eff + CAUSE + Pat];

ALGO SER PERMISO PARA ALGUIEN HACER ALGO MÁS / something to be a permission for somebody to do something else (2 times) – [Eff + $BE_1$ + Pat].

Therefore, the prototypical features for the CD ***concesión*** in the Spanish language are: **Eff** (3), **Pat** (3).

For the ***допуст / поступка*** nominations denoting the CC dominant *CONCESSION* in the Ukrainian language (VTSSUM 2001: 240 / 900; HSUM 1997 I: 425 / III: 373; ESUM 2003 4: 538; Poliuha 2007; SUM 1971 2: 375 / 1976 7: 385) the following recurrent types have been determined:

ЩОСЬ ЗРОБИТИ ЗАРАДИ ЧОГОСЬ (добровільно) / something to do for the sake of something else (voluntarily) (2 times) – [Eff + CAUSE + Rec];

ЩОСЬ ЗРОБИТИ НА КОРИСТЬ КОГОСЬ / something to do in favour of somebody (2 times) – [Eff + CAUSE + Pat];

ЩОСЬ СУПЕРЕЧИТИ ЧОМУСЬ ІНШОМУ (повно / частково) / something to contradict with something else (completely / partly) (2 times) – [Eff + CAUSE + Rec];

ЩОСЬ ВИКЛИКАТИСЯ ЧИМОСЬ ІНШИМ / something to be provoked by something else (2 times) – [Eff + CAUSE + Rec];

ЩОСЬ БУТИ РЕЗУЛЬТАТОМ ЧОГОСЬ ІНШОГО (тимчасово) / something to be the result of something else (temporarily) (2 times) – [Rec + $BE_2$ + Eff].

In general, the prototypical features for the ***допуст*** / ***поступка*** nominations in the Ukrainian language are: **Eff** (5), **Pat** (1), **Rec** (4).

For the CD ***уступка*** in the Russian language (BTSRYa 1998; Efremova 2006 URL: http://www.slovotolk.ru/efr44532.html; Ozhegov 1990: 839; TSRYa URL: http://feb-web.ru/feb/ushakov/ush-abc/0ush.htm; CCRLYa: 1948–1965) only one recurrent variant has been determined:

ЧТО-ТО БЫТЬ В ПОЛЬЗУ КОГО-ТО / something to be in favour of somebody (2 times) – [Eff + CAUSE + Pat].

Thus, the prototypical features for the CD ***уступка*** in the Russian language are: **Eff** (1), **Pat** (1).

To sum up, the major prototypical features for the CC dominant *CONCESSION* are **Eff**, **Pat**, **Rec: (**Eng.) **Eff** (1), **Pat** (1); (Ned.) **Eff** (2), **Pat** (2); (Esp.) **Eff** (3), **Pat** (3); (Ua.) **Eff** (5), **Pat** (1), **Rec** (4); (Ru.) **Eff** (1), **Pat** (1).

***3.5. Intralingual Prototypical Features of the Causal Dominant PURPOSE.***

For the CD ***purpose*** in the English language (CED 2011: 643; Hornby 2010: 1180; LDCE 2012: 1410–1411; NWDTEL 1993: 811–812; SOED 1956: 1624) the following recurrent types of the causal sememes have been determined:

SMTH SMTH ELSE TO BE DONE FOR (2 times) – [Eff + CAUSE + Rec];

SMTH TO BE DONE DELIBERATELY / INTENTIONALLY (2 times) – [<Ag> + CAUSE + Rec] (NB: Ag взято у <…> on denotion of its reductionism in the causal sememe);

SMTH TO ACHIEVE WITH SMTH ELSE (2 times) – [Eff + CAUSE + Rec].

In general, the prototypical features for the causal dominant ***purpose*** in the English language are: **Ag** (<1>), **Eff** (2), **Rec** (3).

For the CD ***doel*** in the Dutch language (EWN 2003 I: 595; MNW URL: http://nl.wikipedia.org/wiki/Middelnederlandsch_Woordenboek; VD 1976: 538; WFT URL: http://gtb.inl.nl/; WNT URL: http://en.wikipedia.org/wiki/Woordenboek_der_Nederlandsche_Taal) the following recurrent types represent the following causal sememes:

IETS ZIJN DOELEINDE VOOR IEMAND / something to be a purpose for somebody (2 times) – [Eff + CAUSE + Pat];

IETS ZIJN OOGMERK VOOR IEMAND / something to be a purpose for somebody to achieve (2 times) – [Eff + CAUSE + Pat];

IEMAND OM IEMAND'S TAKEN OP TE RICHTEN / somebody to direct one's actions on somebody else (2 times) – [Ag + Eff + CAUSE + Pat];

IETS WAAR IEMAND NAAR STREVEN / something somebody to strive for (2 times) – [Ag + CAUSE + Rec];

IETS IEMAND BEDOELEN TE BEREIKEN / something somebody to intend to achieve (2 times) – [Ag + CAUSE + Rec].

Therefore, the prototypical features for the CD ***doel*** in the Dutch language are: **Ag** (3), **Eff** (3), **Pat** (3), **Rec** (2).

The ***fin*** / ***final*** nominations denoting the CC dominant *PURPOSE* in the Spanish language (DE URL: http://es.thefreedictionary.com/chabola; DLE URL: http://www.rae.es /publicaciones/obras-academicas/diccionarios-de-la-real-academia-espanola; DMLE *2007* URL: http://es.thefreedictionary.com/chabola; DSA URL: http://lenguaje.com/cgi-bin/Thesauro.exe?edition_field= causa&B1=Buscar; Moliner 1992) are represented by the following recurrent types:

ALGO A QUE ALGO MÁS DIRIGIRSE (la intención y los medios) / something something else to be directed at (intention and means) (2 times) – [Eff + CAUSE + Rec];

ALGO SER OBJETO DE ALGO MÁS / something to be an aim of something else (2 times) – [Eff + $BE_1$ + Rec];

ALGO SER FINALIDAD PARA HACER ALGO MÁS / something to be a goal to do something else (3 times) – [Eff + $BE_1$ + Rec];

ALGO SER CONCLUSIÓN DE ALGO MÁS – something to be a conclusion from something else (2 times) – [Rec + $BE_2$ + Eff].

In general, the prototypical features for the ***fin*** / ***final*** nominations in the Spanish language are: **Eff** (4), **Rec** (4).

For the ***мета / ціль*** nominations in the Ukrainian language (VTSSUM 2001: 520 / 1365; HSUM 1997 II: 419 / IV: 432; ESUM 1989 3: 447 / 2012 6: 258; Poliuha 2007; SUM 1973 4: 683 / 1980 11: 235) the following recurrent types are determined:

ЩОСЬ ХТОСЬ ПРАГНУТИ / something somebody strive for (4 times) – [Ag + CAUSE + Rec];

ЩОСЬ ХТОСЬ ДОСЯГТИ (бажання) / something somebody to achieve (desire) (2 times) – [Ag + CAUSE + Rec];

ЩОСЬ ХТОСЬ ДОСЯГТИ (намагання) / something somebody to achieve (attempt) (4 times) – [Ag + CAUSE + Rec];

ЩОСЬ БУТИ ЦІЛЛЮ КОГОСЬ / something to be somebody's aim (2 times) – [Eff + BE1 + Pat];

ЩОСЬ БУТИ МЕТОЮ КОГОСЬ / something to be somebody's purpose (2 times) – [Eff + BE1 + Pat];

ЩОСЬ ЗЦІЛИТИ ЩОСЬ ІНШЕ / something to heal something else (2 times) – [Eff + CAUSE + Rec].

Hence, the prototypical features for the ***мета / ціль*** nominations in the Ukrainian language are: **Ag** (3), **Eff** (3), **Pat** (2), **Rec** (4).

For the CD ***цель*** in the Russian language (BTSRYa 1998; Efremova 2006 URL: http://www.slovotolk.ru/efr44532.html; Ozhegov 1990: 870; TSRYa URL: http://feb-web.ru/feb/ushakov/ush-abc/0ush.htm; CCRLYa: 1948–1965) the following recurrent types are identified:

ЧТО-ТО КТО-ТО СТРЕМИТЬСЯ ДОСТИГАТЬ / something somebody to aim at to achieve (4 times) – [Ag + CAUSE + Rec];

ЧТО-ТО К ЧЕМУ КТО-ТО СТРЕМИТЬСЯ / something somebody to aim at (3 times) – [Ag + CAUSE + Rec];

ЧТО-ТО КТО-ТО ДОСТИГАТЬ (желание) / something somebody to achieve (desire) (2 times) – [Ag + CAUSE + Rec];

ЧТО-ТО КТО-ТО НАМЕТИТЬ ДОСТИЧЬ / something somebody to intend to achieve (2 times) – [Ag + CAUSE + Rec];

ЧТО-ТО БЫТЬ ПРЕДЕЛОМ ЧЕГО-ТО / something to be a limit of something else (2 times) – [Eff + BE1 + Rec];

ЧТО-ТО БЫТЬ ПРЕДЕЛОМ КОГО-ТО / something to be a limit of somebody (2 times) – [Eff + BE1 + Pat];

ЧТО-ТО БЫТЬ НАМЕРЕНИЕМ КОГО-ТО / something to be an intention of somebody (2 times) – [Eff + BE1 + Pat].

In general, the prototypical features for the CD ***цель*** in the Russian language are: **Ag** (4), **Eff** (3), **Pat** (2), **Rec** (5).

Therefore, the main prototypical features for the CC dominant *PURPOSE* are **Ag**, **Eff**, **Pat**, **Rec: (**Eng.) **Ag** (<1>), **Eff** (2), **Rec** (3); (Ned.) **Ag** (3), **Eff** (3), **Pat** (3), **Rec** (2); (Esp.)

**Eff** (4), **Rec** (4); (Ua.) **Ag** (3), **Eff** (3), **Pat** (2), **Rec** (4); (Ru.) **Ag** (4), **Eff** (3), **Pat** (2), **Rec** (5).

***3.6. Intralingual Prototypical Features of the Causal Dominant EFFECT.***

The CD ***effect*** in the English language (CED 2011: 243; Hornby 2010: 468; LDCE 2012: 541–542; NWDTEL 1993: 299; SOED 1956) has been determined by the following recurrent types of the causal sememes:

SMTH TO BE CAUSED BY SMB (3 times) – [Ag + CAUSE + Rec];

SMTH TO BE CAUSED BY SMTH ELSE (5 times) – [Eff + CAUSE + Rec];

SMTH TO BE PRODUCED BY SMTH ELSE (3 times) – [Eff + CAUSE + Rec];

SMTH TO BE A RESULT OF SMTH ELSE (3 times) – [Eff + $BE_2$ + Rec];

SMTH TO IMPRESS SMB (3 times) – [Eff + CAUSE + Pat];

SMTH TO INFLUENCE SMB (2 times) – [Eff + CAUSE + Pat].

Hence, the prototypical features for the CD ***effect*** in the English language are: **Ag** (1), **Eff** (5), **Pat** (2), **Rec** (4).

For the CD ***effect*** in the Dutch language (EWN 2003 I: 664; MNW URL: http://nl.wikipedia.org/wiki/Middelnederlandsch_Woordenboek; VD 1976: 614; WFT URL: http://gtb.inl.nl/; WNT URL: http://en.wikipedia.org/wiki/Woordenboek_der_Nederlandsche _Taal) the following recurrent types have been established:

IETS ZIJN UITWERKING VAN IETS ANDERS / something to be a consequence / result of something else (4 times) – [Eff + $BE_2$ + Rec];

IETS ZIJN GEVOLG VAN IETS ANDERS / something to be a consequence of something else (3 times) – [Eff + $BE_2$ + Rec];

IETS HEBBEN INDRUK OP IEMAND / something to have influence on somebody (3 times) – [Eff + CAUSE + Pat].

Generally, the prototypical features for the CD ***effect*** in the Dutch language are: **Eff** (3), **Pat** (1), **Rec** (2).

For the CD ***efecto*** in the Spanish language (DE URL: http://es.thefreedictionary.com/chabola; DLE URL: http://www.rae.es/publicaciones/obras-academicas/diccionarios-de-la-real-academia-espanola; DMLE *2007* URL: http://es.thefreedictionary.com/chabola; DSA URL: http://lenguaje.com/cgi-bin/Thesauro.exe?edition_field= causa&B1 =Buscar; Moliner 1992) the following recurrent types of causal sememes have been defined:

ALGO PARA QUE HACERSE ALGO MÁS / something something else to do for (2 times) – [Eff + CAUSE + Rec];

ALGO SER UN RESULTADO DE ALGO MÁS / something to be a result of something else (7 times) – [Eff + $BE_2$ + Rec];

ALGO SER SURTIDO COMO RESULTADO (deseabo) / something to be secured as a result (desirable) (2 times) – [Eff + $BE_2$ + Rec];

ALGO SER CAUSADO EN ALGO MÁS / something to be caused by something else (2 times) – [Eff + CAUSE + Rec];

ALGO SER CAUSADO POR ALGO MÁS / something to be caused by something else (4 times) – [Eff + CAUSE + Rec].

In general, the prototypical features for the CD ***efecto*** in the Spanish language are: **Eff** (5), **Rec** (5).

For the CD ***ефект*** in the Ukrainian language (VTSSUM 2001: 268; HSUM 1997; ESUM 1985 2: 173; Poliuha 2007; SUM 1970 1: 492) the following recurrent types are presented:

ЩОСЬ ХТОСЬ ВИКЛИКАТИ / something somebody to provoke (2 times) – [Ag + CAUSE + Rec];

ЩОСЬ ВИКЛИКАТИ ЩОСЬ ІНШЕ / something to provoke something else (2 times) – [Eff + CAUSE + Rec];

ЩОСЬ БУТИ РЕЗУЛЬТАТОМ ЧОГОСЬ ІНШОГО / something to be a result of something else (4 times) – [Eff + $BE_2$ + Rec];

ЩОСЬ БУТИ НАСЛІДКОМ ЧОГОСЬ ІНШОГО / something to be a consequence of something else (3 times) – [Eff + $BE_2$ + Rec];

ЩОСЬ ВРАЖАТИ КОГОСЬ / something to impress somebody (2 times) – [Eff + CAUSE + Pat].

Therefore, the prototypical features for the CD ***ефект*** in the Ukrainian language are: **Ag** (1), **Eff** (4), **Pat** (1), **Rec** (4).

The CD ***эффект*** in the Russian language (BTSRYa 1998; Efremova 2006 URL: http://www.slovotolk.ru/efr44532.html; Ozhegov 1990: 910; TSRYa URL: http://feb-web.ru/feb/ushakov/ush-abc/0ush.htm; CCRLYa: 1948–1965) is represented with the following recurrent types of causal sememes:

ЧТО-ТО ПРОИЗВОДИТЬ ВПЕЧАТЛЕНИЕ НА КОГО-ТО / something to make an impression on somebody (2 times) – [Eff + CAUSE + Pat];

ЧТО-ТО БЫТЬ РЕЗУЛЬТАТОМ ЧЕГО-ТО ДРУГОГО / something to be a result of something else (4 times) – [Eff + $BE_2$ + Rec];

ЧТО-ТО БЫТЬ СЛЕДСТВИЕМ ЧЕГО-ТО ДРУГОГО (причины) / something to be a consequence of something else (of cause) (4 times) – [Eff + $BE_2$ + Rec];

КТО-ТО ПРОИЗВОДИТЬ ВПЕЧАТЛЕНИЕ НА КОГО-ТО ДРУГОГО / somebody to make an impression on somebody else (3 times) – [Ag + CAUSE + Pat].

Hence, the prototypical features for the CD ***эффект*** in the Russian language are: **Ag** (1), **Eff** (3), **Pat** (2), **Rec** (2).

Summing up, it is possibke to state that the main prototypical features for the CC dominant *EFFECT* are **Ag**, **Eff**, **Pat**, **Rec: (**Eng.) **Ag** (1), **Eff** (5), **Pat** (2), **Rec** (4); (Ned.) **Eff** (3), **Pat** (1), **Rec** (2); (Esp.) **Eff** (5), **Rec** (5); (Ua.) **Ag** (1), **Eff** (4), **Pat** (1), **Rec** (4); (Ru.) **Ag** (1), **Eff** (3), **Pat** (2), **Rec** (2).

***3.7. Intralingual Prototypical Features of the Causal Dominant CONCLUSION.***

For the CD ***conclusion*** in the English language (CED 2011: 157; Hornby 2010: 301; LDCE 2012: 346–347; NWDTEL 1993: 202; SOED 1956) the following recurrent types of the causal sememas have been identified:

SMTH TO BE AN OUTCOME OF SMTH ELSE (2 times) – [Eff + $BE_2$ + Rec];

SMTH TO BE BASED ON SMTH ELSE (3 times) – 14 [Eff + CAUSE + Rec].

Thus, the prototypical features for the CD ***conclusion*** in the English language are: **Eff** (2), **Rec** (2).

The CD ***conclusie*** in the Dutch language (EWN 2003 I: 474; MNW URL: http://nl.wikipedia.org/wiki/Middelnederlandsch_Woordenboek; VD 1976: 465; WFT URL: http://gtb.inl.nl/; WNT URL: http://en.wikipedia.org/wiki/Woordenboek_der_Nederlandsche _Taal) is represented with the following recurrent types:

IETS ZIJN DE GEVOLGTREKKING VAN IETS ANDERS / something to be an inference from something else (2 times) – [Eff + $BE_2$ + Rec];

ETS ZIJN SLOTSOM VAN IETS ANDERS / something to be a conclusion of something else (3 times) – [Eff + $BE_2$ + Rec];

IETS ZIJN DE SLOTSOM UIT IETS ANDERS / something to be a conclusion from something else (2 times) – [Eff + $BE_2$ + Rec].

In general, the prototypical features for the CD ***conclusie*** in the Dutch language are **Eff** (3), **Rec** (3).

For the CD ***conclusión*** in the Spanish language (DE URL: http://es.thefreedictionary.com/chabola; DLE URL: http://www.rae.es/publicaciones/obras-academicas/diccionarios-de-la-real-academia-espanola; DMLE *2007* URL: http://es.thefreedictionary.com/chabola; DSA URL: http://lenguaje.com/cgi-bin/Thesauro.exe?edition_field= causa&B1 =Buscar; Moliner 1992 I) the following recurrent types are represented:

ALGO SER EFECTO DE ALGO MÁS / something to be an effect of something else (2 times) – [Eff + $BE_2$ + Rec];

ALGO SER DEDUCCION DE ALGO MÁS / something to be a deductive conclusion from something else (2 times) – [Eff + $BE_2$ + Rec];

ALGO SER CONSECUENCIA DE ALGO MÁS / something to be a consequence of something else (3 times) – [Eff + $BE_2$ + Rec];

ALGO LLEGAR COMO FINAL DE UN RAZONAMIENTO / something to come as the conclusion after some reflection (2 times) – [Eff + CAUSE + Rec].

Generally, the prototypical features for the CD ***conclusión*** in the Spanish language are: **Eff** (4), **Rec** (4).

For the ***висновок*** / ***вивід*** nominations denoting the CC dominant *CONCLUSION* in the Ukrainian language (VTSSUM 2001; HSUM 1997; ESUM; Poliuha 2007; SUM 1970 1: 364) (585; 588; 592; 605; 613, 1, с. 364) no recurrent types have been revealed.

For the CD ***вывод*** in the Russian language (BTSRYa 1998; Efremova 2006 URL: http://www.slovotolk.ru/efr44532.html; Ozhegov 1990: 114; TSRYa URL: http://feb-web.ru/feb/ushakov/ush-abc/0ush.htm; CCRLYa: 1948–1965) two (2) recurrent types are identified:

ЧТО-ТО БЫТЬ ЛОГИЧЕСКИМ ЗАКЛЮЧЕНИЕМ / something to be a logical conclusion (2 times) – [Eff + $BE_2$ + Rec];

ЧТО-ТО БЫТЬ УМОЗАКЛЮЧЕНИЕМ КОГО-ТО / something to be somebody's conclusion (2 times) – [Ag + $BE_2$ + Rec].

Therefore, the prototypical features for the CD ***вывод*** in the Russian language are: **Ag** (1), **Eff** (1), **Rec** (2).

Summing up, we can state that the main prototypical features for the CC dominant *CONCLUSION* are **Ag**, **Eff**, **Rec: (**Eng.) **Eff** (2), **Rec** (2); (Ned.) **Eff** (3), **Rec** (3); (Esp.) **Eff** (4), **Rec** (4); (Ru.) **Ag** (1), **Eff** (1), **Rec** (2). No recurrent types for the CD *висновок* in the Ukrainian language have been revealed.

***3.8. Intralingual Prototypical Features of the Causal Dominant RESULT.***

For the CD ***result*** in the English language (CED 2011: 679; Hornby 2010: 1247–1248; LDCE 2012: 1491–1492; NWDTEL 1993: 849; SOED 1956) the following recurrent types of the causal sememes have been determined:

SMTH TO BE THE OUTCOME OF SMTH ELSE (2 times) – [Eff + $BE_2$ + Rec];

SMTH TO BE THE EFFECT OF SMTH ELSE (2 times) – [Eff + $BE_2$ + Rec];

SMTH TO BE A CONSEQUENCE OF SMTH ELSE (2 times) – [Eff + $BE_2$ + Rec];

SMTH TO HAPPEN BECAUSE OF SMTH ELSE (2 times) – [Eff + CAUSE + Rec].

Thus, the prototypical features for the CD ***result*** in the English language are: **Eff** (4), **Rec** (4).

For the CD ***resultaat*** in the Dutch language (EWN; MNW URL: http://nl.wikipedia.org/wiki/Middelnederlandsch_Woordenboek; VD 1976: 2044; WFT URL: http://gtb.inl.nl/; WNT URL: http://en.wikipedia.org/wiki/Woordenboek_der _Nederlandsche_Taal) the following recurrent types have been determined:

IETS TE VOLGEN UIT IETS ANDERS / something to follow something else (3 times) – [Eff + CAUSE + Rec];

IETS ZIJN DE VRUCHT VAN IETS ANDERS / something to be a product / fruit of something else (a successful result) (2 times) – [Eff + $BE_2$ + Rec];

IETS ZIJN UITKOMST VAN IETS ANDERS / something to be a result of something else (2 times) – [Eff + $BE_2$ + Rec].

In general, the prototypical features for the CD ***resultaat*** in the Dutch language are: **Eff** (3), **Rec** (3).

The ***resulta*** / ***resultado*** nominations denoting the CC dominant *RESULT* in the Spanish language (DE URL: http://es.thefreedictionary.com/chabola; DLE URL: http://www.rae.es /publicaciones/obras-academicas/diccionarios-de-la-real-academia-espanola; DMLE *2007* URL: http://es.thefreedictionary.com/chabola; DSA URL: http://lenguaje.com/cgi-bin/Thesauro.exe?edition_field= causa&B1 =Buscar; Moliner 1992 I: 1023) are represented with the following recurrent types:

ALGO SER EFECTO DE ALGO MÁS / something to be the effect of something else (9 times) – [Eff + $BE_2$ + Rec];

ALGO SER CONSECUENCIA DE ALGO MÁS / something to be a consequence of something else (8 times) – [Eff + $BE_2$ + Rec].

Generally, the prototypical features for the ***resulta*** / ***resultado*** nominations in the Spanish language are: **Eff** (2), **Rec** (2).

For the CD ***результат*** in the Ukrainian language (VTSSUM 2001: 1022; HSUM 1997; ESUM 2006 5: 49; Poliuha 2007; SUM 1977 8: 489) only one (1) recurrent type is identified :

ЩОСЬ БУТИ НАСЛІДКОМ ЧОГОСЬ ІНШОГО / something to be a consequence of something else (2 times) – [Eff + $BE_2$ + Rec].

Thus, the prototypical features for the CD ***результат*** in the Ukrainian language are: **Eff** (1), **Rec** (1).

For the CD ***результат*** in the Russian language (BTSRYa 1998; Efremova 2006 URL: http://www.slovotolk.ru/efr44532.html; Ozhegov 1990: 673; TSRYa URL: http://feb-web.ru/feb/ushakov/ush-abc/0ush.htm; CCRLYa: 1948–1965) three (3) recurrent types are established:

ЧТО-ТО БЫТЬ СЛЕДСТВИЕМ ЧЕГО-ТО ДРУГОГО / something to be a consequence of something else (5 times) – [Eff + $BE_2$ + Rec];

ЧТО-ТО ВЫТЕКАТЬ ИЗ ЧЕГО-ТО ДРУГОГО / something to appear from something else (2 times) – [Eff + CAUSE + Rec];

ЧТО-ТО ЗАВЕРШАТЬ СОБОЙ ЧТО-ТО ДРУГОЕ / something to complete (by itself) something else (2 times) – [Eff + CAUSE + Rec].

In general, the prototypical features for the CD ***результат*** in the Russian language are: **Eff** (3), **Rec** (3).

Therefore, the main prototypical features for the CC dominant КК *RESULT* are **Eff**, **Rec: (**Eng.) **Eff** (4), **Rec** (4); (Ned.) **Eff** (3), **Rec** (3); (Esp.) **Eff** (2), **Rec** (2); (Ua.) **Eff** (1), **Rec** (1); (Ru.) **Eff** (3), **Rec** (3).

***3.9. Intralingual Prototypical Features of the Causal Dominant CONSEQUENCE.***

For the CD ***consequence*** in the English language (CED 2011: 161; Hornby 2010: 309; LDCE 2012: 357; NWDTEL 1993: 207; SOED 1956) only one (1) recurrent type is identified:

SMTH TO BE A RESULT OF SMTH ELSE (2 times) – [Eff + $BE_2$ + Rec].

Hence, the prototypical features for the CD ***consequence*** in the English language are: **Eff** (1), **Rec** (1).

For the ***gevolg*** / ***consequentie*** nominations denoting the CC dominant *CONSEQUENCE* in the Dutch language [EWN 2005 II: 259 / 2003 I: 482; MNW URL:

http://nl.wikipedia.org/wiki/Middelnederlandsch_Woordenboek; VD 1976: 806 / 469; WFT URL: http://gtb.inl.nl/; WNT URL: http://en.wikipedia.org/wiki/Woordenboek_der_Nederlandsche_Taal] the following recurrent types have been determined:

IETS VOLGEN UIT IETS ANDERS / something to follow something else (4 times) – [Eff + CAUSE + Rec];

IEMAND VOLGEN IEMAND ANDERS (hooggeplaatst) / somebody to follow somebody else (of high rank) (5 times) – [Ag + CAUSE + Pat];

IETS ZIJN RESULTAAT VAN IETS ANDERS / something to be a result of something else (3 times) – [Eff + $BE_2$ + Rec].

Thus, the prototypical features for the ***gevolg*** / ***consequentie*** nominations in the Dutch language are: **Ag** (1), **Eff** (2), **Pat** (1), **Rec** (2).

For the CD ***consecuencia*** in the Spanish language [DE URL: http://es.thefreedictionary.com/chabola; DLE URL: http://www.rae.es/publicaciones/obras-academicas/diccionarios-de-la-real-academia-espanola; DMLE *2007* URL: http://es.thefreedictionary.com/chabola; DSA URL: http://lenguaje.com/cgi-bin/Thesauro.exe?edition_field= causa&B1 =Buscar; Moliner 1992] the following recurrent types have been established:

ALGO SEGUIRSE DE ALGO MÁS / something to appear from something else (3 times) – [Eff + CAUSE + Rec];

ALGO RESULTAR DE ALGO MÁS / something to happen as a result of something else (3 times) – [Eff + CAUSE + Rec];

ALGO SER EFECTO DE ALGO MÁS / something to be an effect of something else (3 times) – [Eff + $BE_2$ + Rec];

ALGO SER RESULTADO DE ALGO MÁS / something to be a result of something else (2 times) – [Eff + $BE_2$ + Rec].

In general, the prototype features for the CD ***consecuencia*** in the Spanish language are: **Eff** (4), **Rec** (4).

The CD ***наслідок*** in the Ukrainian language [VTSSUM 2001: 581; HSUM 1997 II: 520; ESUM; Poliuha 2007; SUM 1974 5: 192] is represented with the following recurrent types of the causal sememes:

ЩОСЬ ВИХОДИТИ З ЧОГОСЬ ІНШОГО – something to come out from something else (2 times) – [Eff + CAUSE + Rec];

ЩОСЬ ВИПЛИВАТИ З ЧОГОСЬ ІНШОГО / something to follow something else (2 times) – [Eff + CAUSE + Rec];

ЩОСЬ БУТИ РЕЗУЛЬТАТОМ ЧОГОСЬ ІНШОГО / something to be a result of something else (2 times) – [Eff + $BE_2$ + Rec];

ЩОСЬ БУТИ ПРИЧИНОЮ ЧОГОСЬ ІНШОГО (результату) / something to be a cause of something else (result) (2 times) – [Eff + $BE_1$ + Rec].

Generally, the prototypical features for the CD ***наслідок*** in the Ukrainian language are: **Eff** (4), **Rec** (4).

The CD ***следствие*** in the Russian language (BTSRYa 1998; Efremova 2006 URL: http://www.slovotolk.ru/efr44532.html; Ozhegov 1990: 727; TSRYa URL: http://feb-web.ru/feb/ushakov/ush-abc/0ush.htm; CCRLYa: 1948–1965) is represented with five (5) recurrent types:

ЧТО-ТО ВЫТЕКАТЬ ИЗ ЧЕГО-ТО ДРУГОГО / something to appear from something else (4 times) – [Eff + CAUSE + Rec];

ЧТО-ТО СЛЕДОВАТЬ ИЗ ЧЕГО-ТО ДРУГОГО / something to follow something else (3 times) – [Eff + CAUSE + Rec];

ЧТО-ТО БЫТЬ ВЫВОДОМ ИЗ ЧЕГО-ТО ДРУГОГО / something to be a conclusion from something else (4 times) – [Eff + $BE_2$ + Rec];

ЧТО-ТО БЫТЬ РЕЗУЛЬТАТОМ ЧЕГО-ТО ДРУГОГО / something to be a result of something else (5 times) – [Eff + $BE_2$ + Rec];

ЧТО-ТО БЫТЬ ПОСЛЕДСТВИЕМ ЧЕГО-ТО ДРУГОГО / something to be a consequence of something else (4 times) – [Eff + $BE_2$ + Rec].

Hence, the prototypical features for the CD ***следствие*** in the Russian language are: **Eff** (5), **Rec** (5).

Consequently, the main prototypical features for the CC dominant *CONSEQUENCE* are **Ag, Eff, Pat, Rec: (**Eng.) **Eff** (1), **Rec** (1); (Ned.) **Ag** (1), **Eff** (2), **Pat** (1), **Rec** (2); (Esp.) **Eff** (4), **Rec** (4); (Ua.) **Eff** (4), **Rec** (4); (Ru.) **Eff** (5), **Rec** (5).

***3.10. Intralingual Prototypical Features of the Causal Dominant MEANS.***

For the CD ***means*** in the English language (CED 2011: 484; Hornby 2010: 914; LDCE 2012: 1085–1086; NWDTEL 1993: 619; SOED 1956) the following recurrent types of the causal schemes have been determined:

SMTH TO BE AN INSTRUMENT TO OBTAIN SMTH ELSE (2 times) – [Eff + $BE_2$ + Rec];

SMTH TO BE A METHOD TO OBTAIN SMTH ELSE (2 times) – [Eff + $BE_1$ + Rec];

SMTH TO ACHIEVE SMTH ELSE WITH (2 times) – [Eff + CAUSE + Rec];

SMTH TO ACHIEVE A RESULT WITH (2 times) – [Eff + CAUSE + Rec].

Thus, the prototypical features for the CD ***means*** in the English language are: **Eff** (4), **Rec** (4).

The CD ***middle*** in the Dutch language (EWN 2007 III: 347; MNW URL: http://nl.wikipedia.org/wiki/Middelnederlandsch_Woordenboek; VD 1976: 1467; WFT URL: http://gtb.inl.nl/; WNT URL: http://en.wikipedia.org/wiki/Woordenboek_der_Nederlandsche_Taal) is represented with the following recurrent types:

IEMAND ZIJN BEMIDDELEND TE DOEN IETS / somebody to be a mediator to do something (2 times) – [Ag + CAUSE + Rec];

IETS ZIJN DE HULPMIDDEL VAN DOEN IETS ANDERS / something to be an instrument to do something else (2 times) – [Eff + $BE_1$ + Rec];

IETS IEMAND ZICH BEDIENEN OM TOT IETS ANDERS TE KOMEN / something somebody to use to get to something else (2 times) – [Ag + Eff + CAUSE + Rec];

IETS IEMAND AANWENDEN TE DOEN IETS ANDERS / something somebody to use to do something else (2 times) – [Ag + Eff + CAUSE + Rec];

IETS MOGELIJK MAKEN IETS ANDERS / something to make it possible something else (2 times) – [Eff + CAUSE + Rec].

In general, the prototypical features for the CD ***middle*** in the Dutch language are: **Ag** (3), **Eff** (4), **Rec** (5).

For the CD ***medio*** in the Spanish language (DE URL: http://es.thefreedictionary.com /chabola; DLE URL: http://www.rae.es/publicaciones/obras-academicas/diccionarios-de-la-real-academia-espanola; DMLE *2007* URL: http://es.thefreedictionary.com/chabola; DSA URL: http://lenguaje.com/cgi-bin/Thesauro.exe?edition_field= causa&B1 =Buscar; Moliner 1992) the following recurrent types are identified:

ALGO SER CONVENIENTE PARA CONSEGUIR ALGO MÁS / something to be useful to achieve something else (2 times) – [Eff + CAUSE + Rec];

ALGO INFLUIR EN ALGO MÁS / something to affect something else (3 times) – [Eff + CAUSE + Rec];

ALGO INFLUIR EN ALGUIEN / something to affect somebody (3 times) – [Eff + CAUSE + Pat];

ALGO REGULAR ALGO MÁS / something to regulate something else (2 times) – [Eff + CAUSE + Rec];

ALGO CON QUE CONSEGUIR ALGO MÁS / something to achieve something else with (2 times) – [Eff + CAUSE + Rec].

In general, the prototypical features for the CD ***medio*** in the Spanish language are: **Eff** (5), **Pat** (1), **Rec** (4).

The CD ***засіб*** in the Ukrainian language (VTSSUM 2001: 326; HSUM 1997 II: 95; ESUM 1985 2: 239; Poliuha 2007; SUM 1972 3: 307) is represented with the following recurrent types of the causal sememes:

ЩОСЬ ДАТИ МОЖЛИВІСТЬ ЗДІЙСНИТИ ЩОСЬ ІНШЕ – something to enable to accomplish something else (2 times) – [Eff + CAUSE + Rec];

ЩОСЬ ДАТИ МОЖЛИВІСТЬ ДОСЯГТИ ЧОГОСЬ ІНШОГО – something to enable to achieve something else (2 times) – [Eff + CAUSE + Rec];

ЩОСЬ БУТИ СПОСОБОМ ДЛЯ ЧОГОСЬ ІНШОГО (2 times) / something to be a way to something else – [Eff + CAUSE + Rec];

ЩОСЬ ЛІКУВАТИ КОГОСЬ / something to treat / cure somebody (2 times) – [Eff + CAUSE + Pat];

ЩОСЬ ПОПЕРЕДЖАТИ ЩОСЬ ІНШЕ / something to prevent something else (2 times) – [Eff + CAUSE + Rec];

ЩОСЬ ДОПОМАГАТИ ЧОМУСЬ ІНШОМУ / – something to help something else (2 times) – [Eff + CAUSE + Rec].

Hence, the prototypical features for the CD ***засіб*** in the Ukrainian language are: **Eff** (6), **Pat** (1), **Rec** (5).

For the CD ***средство*** in the Russian language (BTSRYa 1998; Efremova 2006 URL: http://www.slovotolk.ru/efr44532.html; Ozhegov 1990: 758; TSRYa URL: http://feb-web.ru/feb/ushakov/ush-abc/0ush.htm; CCRLYa: 1948–1965) the following recurrent types of the causal sememes have been determined:

ЧТО-ТО БЫТЬ ПРИЁМОМ ДОСТИГАТЬ ЧТО-ТО ДРУГОЕ / something to be a method to achieve something else (2 times) – [Eff + CAUSE + Rec];

ЧТО-ТО БЫТЬ СПОСОБОМ ДОСТИГАТЬ ЧТО-ТО ДРУГОЕ / something to be a way to achieve something else (4 times) – [Eff + CAUSE + Rec];

ЧТО-ТО БЫТЬ ОРУДИЕМ ДЛЯ ЧЕГО-ТО ДРУГОГО / something to be an instrument for something else (2 times) – [Eff + CAUSE + Rec];

ЧТО-ТО БЫТЬ НЕОБХОДИМЫМ ДЛЯ ЧЕГО-ТО ДРУГОГО / something to be necessary for something else (6 times) – [Eff + CAUSE + Rec];

ЧТО-ТО БЫТЬ НЕОБХОДИМЫМ ДЛЯ ЛЕЧЕНИЯ ЧЕГО-ТО ДРУГОГО / something to be necessary to treat something else (2 times) – [Eff + CAUSE + Rec];

ЧТО-ТО БЫТЬ НЕОБХОДИМЫМ ДЛЯ КОГО-ТО / something to be necessary for somebody (2 times) – [Eff + CAUSE + Pat];

ЧТО-ТО БЫТЬ НЕОБХОДИМЫМ ДЛЯ ЛЕЧЕНИЯ КОГО-ТО / something to be necessary for somebody's treatment (2 times) – [Eff + CAUSE + Pat + Rec];

ЧТО-ТО ОТ ЧЕГО ЧТО-ТО ДРУГОЕ ЗАВИСЕТЬ / something something else to depend upon (3 times) – [Eff + CAUSE + Rec].

Thus, the prototypical features for the CD ***средство*** in the Russian language are: **Eff** (8), **Pat** (2), **Rec** (7).

Consequently, the major prototypical features for the CC dominant *MEANS* are **Ag**, **Eff**, **Pat**, **Rec: (**Eng.) **Eff** (4), **Rec** (4); (Ned.) **Ag** (3), **Eff** (4), **Rec** (5); (Esp.) **Eff** (5), **Pat** (1), **Rec** (4); (Ua.) **Eff** (6), **Pat** (1), **Rec** (5); (Ru.) **Eff** (8), **Pat** (2), **Rec** (7).

***4. Discussion.***

Summing up all the data given in 2.1–2.10, it is possible to present chains of semantic roles, typical of causal situations, that is three (3) generalized models:

1) [Ag +/ Eff + CAUSE + Pat +/ Rec +/ Instr];

2) [Ag +/ Eff + $BE_1$ + Pat +/ Rec +/ Instr];

3) [Ag +/ Eff + $BE_2$ + Pat +/ Rec +/ Instr].

Despite the fact that some scholars, for example K. Hale, S. Keyser, T. Reinhart (Hale, Keyser 1993; Reinhart 2002) consider the concept of semantic roles to be excess, because, in their opinion, the roles of arguments can be logically deduced from the deep syntactic structure, we do insist on its use, since it makes it possible to contrast not only any types within one language (intralingual comparison), but also in different languages. Moreover in case a reader doesn't know any of the languages presented in the research, he / she can easily see common and specific features based on the semantic roles assigned.

The variety of semantic roles (Cf. thematic (Kasper 2008)) depends on the level of detalization or fragmentation ("role fragmentation" by D. Dowty (Dowty 1979)) as a result of a deeper semantic and syntactic analysis. The disparity in its set is usually reflected in the number of peripheral semantic roles (e.g., *Contractor, Stimulus, Source*) or in the combination / fragmentation of nuclear roles (*Agent / Effector; Addressee* / *Recipient* / *Beneficient, Patient* / *Subject* / *Result*, etc.).

R. Jackendoff distinguishes two levels of lexical representation: thematic and action ("thematic and action tiers") (Jackendoff 1987; 1990); J. Grimshaw (Grimshaw 1990) differentiates two levels as well – these are aspectual and thematic ("aspectual and thematic"). Thus, the statement about the correspondence between one argument and one semantic role is incorrect, that is, different approaches result in identification of different semantic roles.

Identifying the prototypical semantic roles for the causal situation, we believe (following R. Van Valin (Van Valin 1993; 2001) and D. Dowty (Dowty 1991)) that there are no indivisible events, every event has its structure (Ritter, Rosch 2000).

Supporting the idea of M. Daniel and Yu. Lander (Daniel, Lander 2013) as for the possibility of interpreting one and the same situation differently in different languages and sometimes even within one language, we put an emphasis on the chances when the same participants can perform various semantic roles.

***5. Conclusions.***

The analysis of 1115 causal sememes identified based on the data from 24 dictionaries of 5 languages revealed the prototypical features for 10 causal dominants in English, Dutch, Spanish, Ukrainian, and Russian. As a result prototypical features for the English CC include Ag (5), Eff (33), Pat (2), Rec (34); for the Dutch CC – Ag (8), Eff (33), Pat (9), Rec (29); for the Spanish CC – Ag (0), Eff (41), Pat (4), Rec (37); for the Ukrainian CC – Ag (7), Eff (36), Pat (8), Rec (35); for the Russian one – Ag (7), Eff (42), Pat (8), Rec (42).

The results obtained for intralingual prototypes in English, Dutch, Spanish, Ukrainian, and Russian can serve as the basis for further identification of intralingual prototypes in the other languages, as well as defining crosslingual prototypes of the causal dominants in related languages, showing the universal and specific in mapping the phenomena of causal reality by different ethnic groups.

## *References*


Daniel, M. A., Lander, Yu. A. (2013). Neravnopravie roley v otnositelnyih konstruktsiyah: materialyi po chastotnosti relyativizatsii v archinskom i udinskom yazyikah [Inequality of roles in relative constructions: materials on the frequency of relativization in the Archi and Udin languages]. *Semantika yazyikovyih edinits raznyih urovney*. Mahachkala. 15. 59–78.

Davyidov, I. I. (1853). *Opyit obschesravnitelnoy grammatiki russkogo yazyika, izdannyiy 2-m otdeleniem imp. akademii nauk* [The experience of the general grammar of the Russian language, published by the 2nd department of the Empress. Academy of Sciences]. 2-e izd. XLIV. 497.

Dowty, D. (1991). Thematic Proto-Roles and Argument Selection. *Language*. 67. 3. 547–619.

Dowty, D. (1979). *Word Meaning and Montague Grammar: The Semantics of Verbs and Times in Generative Semantics and in Montague's Ptq*. Dordrecht: D. Reidel. 415.

Dzheyms, K. (1989). Kontrastivnyiy analiz: per. s angl. N. A. Laufer [Contrastive analysis: transl. from English by N. A. Laufer]. *Novoe v zarubezhnoy lingvistike. Vyip. XXV. Kontrastivnaya lingvistika*. M.: Progress. 205–306.

Furs, L. A. (2004). Sintaksicheski reprezentiruemyie kontseptyi [Syntactically representable concepts]: dis. ... doktora filol. nauk. Tambov. 370.

Gak, V. G. (1989). O kontrastivnoy lingvistike [On Contrastive Linguistics] (vstup. st.). *Novoe v zarubezhnoy lingvistike. Vyip. XXV. Kontrastivnaya lingvistika*. M.: Progress. 5–17.

Grimshaw, J. (1990). *Argument Structure*. Cambridge, Mass.: MIT Press. 202.

Hale, K. L., Keyser, S. J. (1993). On Argument Structure and the Lexical Expression of Syntactic Relations. *The View from Building 20: Essays in honor of Sylvain Bromberger*. Cambridge: MIT Press. 53–109.

Jackendoff, R. (1990). *Semantic Structures*. Cambridge, MA: The MIT Press. 336.

Jackendoff, R. (1987). The status of thematic relations in linguistic theory. *Linguistic Inquiry*. 18. 369–411.

Kasper, S. (2008). *A comparison of "thematic role" theories*. Marburg. 181.

Kibrik, A. E. (2004). Opyit frontalnogo korpusnogo issledovaniya konstruktsiy s vnutrennim i vneshnim posessorom [The experience of a frontal case study of structures with an internal and external possessor]. *Dokladyi mezhdunarodnoy konferentsii Dialog*. 265–275.

Kocherhan, M. P. (2006). *Osnovy zistavnoho movoznavstva* [Fundamentals of comparative linguistics]. K. : VTs "Akademiia". 424.

Koduhov, V. I. (2013). *Obschee yazyikoznanie* [General linguistics]. 6-e izd. M.: Knizhnyiy dom "LIBROKOM". 304.

Komarov, A. P. (1970). *O lingvisticheskom statuse kauzalnoy svyazi* [On the linguistic status of causal connection]. Alma-Ata. 20.

Ksheshovskiy, T. P. (1989). Ekvivalentnost, kongruentnost i glubinnaya struktura: per. s angl. M. V. Levashovoy [Equivalence, congruence and depth structure: transl. from English by M. V. Levashova]. *Novoe v zarubezhnoy lingvistike. Vyip. XXV. Kontrastivnaya lingvistika*. M.: Progress. 327–340.

Lakoff, G., Johnson, M. (1980 / 1981). *Metaphors We Live By*. Chicago: University of Chicago Press. 242.

Lemish, N. (2014). A Structural and Semantic Typology of the Causal Complex in English. *Austrian Journal of Humanities and Social Sciences. Section 11. Philology and Linguistics*. Vienna. 7–8. 221–225.

Lemish, N. (2015). Structural schemes to represent causal complex dominants in Dutch. *European Research: Scientific Journal*. 3(4). 72–75.

Lemish, N. Ye. (2014). Syntaksychnyi kontsept yak tertium comparationis pry vstanovlenni typolohii struktur kauzalnoho kompleksu (na materiali niderlandskoi ta ukrainskoi mov) [Syntactic concept as tertium comparationis in determining the typology of structures of the causal complex (based on the Dutch and Ukrainian language)]. *Visnyk Kyivskoho natsionalnoho linhvistychnoho universytetu. Ser. Filolohiia*. K.: Vyd. tsentr KNLU. 17. 1. 107–114.

Lemish, N. Ye. (2012). Zistavnyi analiz skladovykh kauzalnoho kompleksu v riznostrukturnykh movakh [Comparative analysis of the components of the causal complex in different languages]. *Visnyk Mariupolskoho derzhavnoho universytetu. Ser. Filolohiia*. Mariupol: MDU. 6. 108–114.

Levytskyi, V. V. (2008). *Osnovy hermanistyky* [Fundamentals of German Studies]. Vinnytsia: Nova knyha. 528.

Otkupschikov, Yu. V. (2005). *Iz istorii indoevropeyskogo slovoobrazovaniya* [From the history of the Indo-European word-formation]. 2-e izd., ispr. i dop. SPb.: Filologicheskiy fakultet SPbGU; M.: Akademiya. 320.

Pizani, V. (1956). *Etimologiya. Istoriya – problemyi – metod: per. s ital. D. E. Rozentalya* [Etymology. History – Problems – Method: transl. from Italian by D. E. Rozental]. M.: Izd-vo inostrannoy literaturyi. 188.

Polev, D. M. (2009). Etalon, prototip i stereotip kak mehanizmyi vospriyatiya cheloveka chelovekom [Etalone, prototype and stereotype as mechanisms of perception of a person by a person]. *Vestnik YuUrGU. Seriya Psihologiya*. 5. 18. 19–25.

Popova, Z. D. (2008). Sintaksicheskiy kontsept i mezhkulturnaya kommunikatsiya [Syntactic concept and intercultural communication]. *Vestnik Voronezhskogo gosudarstvennogo universiteta. Seriya Lingvistika i mezhkulturnaya kommunikatsiya*. Voronezh. 2. 27–31.

Reinhart, T. (2002). The Theta System: an Overview. *Theoretical Linguistics*. 28. 229–290.

Ritter, E., Rosen, S. (2000). Event Structure and Ergativity. *Events as Grammatical Objects. The Converging Perspectives of Lexical Semantics and Syntax*. eds C. Tenny, J. Pustejovsky. California: CSLI Publications. 187–238.

Rosch, E. (1978). Principles of categorization. *Cognition and categorization*. Hillsdale: Lawrence Erlbaum Associates. 27–48.

Selivanova, O. O. (2010). *Linhvistychna entsyklopediia* [Linguistic Encyclopedia]. Poltava: Dovkillia-K. 844.

Shternemann, R. (1989). Vvedenie v kontrastivnuyu lingvistiku: per. s nem. E. R. Skvayre [Introduction to Contrastive Linguistics: transl. from German by E. R. Skvayre]. *Novoe v zarubezhnoy lingvistike. Vyip. XXV. Kontrastivnaya lingvistika*. M.: Progress. 144–178.

Shubina, T. P. (1986). Semantika obuslovlennosti v slozhnopodchinYonnom predlozhenii (na materiale altayskogo yazyika) [Semantics of Conditionality in a Complex Subordinate Sentence (based on the Altaic language)]. *Sintaksicheskaya i leksicheskaya semantika (na materiale yazyikov raznyih sistem)*. Novosibirsk: Nauka. 66–79.

Slukhai, N. V. (2011). "Pertseptyvnyi prototyp" v paradyhmi kohnityvnoi semantyky ["Perceptual prototype" in the paradigm of cognitive semantics]. *Movni i kontseptualni kartyny svitu*. 36. 304–309.

Toporov, V. N. (1990). Sravnitelno-istoricheskoe yazyikoznanie [Comparative-historical linguistics]. *Lingvisticheskiy entsiklopedicheskiy slovar*, gl. red. V. N. Yartseva. M.: Sov. entsiklopediya. 486–490.

Trubachev, O. N. (1976). Etimologicheskie issledovaniya i leksicheskaya semantika [Etymological studies and lexical semantics]. *Printsipyi i metodyi semanticheskih issledovaniy*. M. 147–179.

Van Valin, R. D. Jr. (1993). Role and Reference Grammar. *Work Papers of the Summer Institute of Linguistics*. 37. 12. (University of North Dakota Session).

Van Valin, R. D. Jr. (2001). *Semantic Macroroles in Role and Reference Grammar*. University at Buffalo, The State University of New York. 1–15.

Volohina, G. A., Popova, Z. D. (1999). *Sintaksicheskie kontseptyi russkogo prostogo predlozheniya* [Syntactic concepts of the Russian simple sentence]. Voronezh. 196.

Wierzbicka, A. (1996). *Semantic primes and universals*. Oxford: Oxford University Press. 500.

Yung, K. G. (1991). Arhetip i simvol [Archetype and symbol]. M.: Renessans. 304.

## ***Lexicographic Sources***

BTSRYa – *Bolshoy tolkovyiy slovar russkogo yazyika* [Great Dictionary of the Russian language] (1998). gl. red. S. A. Kuznetsov. 1-e izd. SPb.: Norint. 1535.

CCRLYa – Slovar sovremennogo russkogo literaturnogo yazyika: v 17 t. [Dictionary of the modern Russian literary language: in 17 vol.] (1948–1965). red. V. I. Chernyishyova. M.; L.: Izd-vo AN SSSR.

CED – *Collins English Dictionary* (2011). 6th ed. Glasgow: HarperCollins Publishers. 949.

DE – *Diccionario Enciclopédico* [Encyclopedic Dictionary] (2009). Larousse Editorial, S.L. 1. http://es.thefreedictionary.com/chabola.

DEL – *El Diccionario de la lengua española* [Dictionary of the Spanish language]. (2001). Espasa–Calpe. Retrieved from http://www.rae.es/publicaciones/obras-academicas/diccionarios-de-la-real-academia-espanola.

DMLE – *Diccionario Manual de la Lengua Española* [Manual Dictionary of the Spanish Language] (2007). Larousse Editorial, S.L. http://es.thefreedictionary.com/chabola.

DSA – *El Diccionario de Sinónimos y Antónimos* [Dictionary of Synonyms and Antonyms]. Retrieved from http://lenguaje.com/cgi-bin/Thesauro.exe?edition_field= causa&B1 =Buscar.

Efremova, T. F. (2006). *Sovremennyiy tolkovyiy slovar russkogo yazyika: v 3 t.* [Modern explanatory dictionary of the Russian language: in 3 vol.]. M.: AST, Astrel, Harvest. http://www.slovotolk.ru/efr44532.html.

ESUM – *Etymolohichnyi slovnyk ukrainskoi movy: u 7 t.* [Etymological Dictionary of the Ukrainian Language: in 7 vol.] (1982–2012). uklad. O. S. Melnychuk ta in. K.: Naukova dumka. 1: A–H. 634; 2: D–Koptsi. 573; 3: Kora–M. 553; 4: N–P. 657; 5: R–T. 705; 6: U–Ia. 569.

EWN – *Etymologisch woordenboek van het Nederlands: in 4 v.* [Etymological dictionary of Dutch: in 4 v.] (2003–2009). onder hoofdredactie van dr. Marlies Philippa, dr. Frans Debrabandere, prof. dr. Arend Quak, dr. Tanneke Schoonheim en dr. Nicoline van der Sijs. Amsterdam: Amsterdam University Press. I: A–E. 725; II: F–Ka. 659; III: Ke–R. 695; IV: S–Z. 687.

Hornby, A. S. (2010). *Oxford Advanced Learner's Dictionary of Current English*. 7th ed. Oxford University Press. 1716.

HSUM – *Slovar ukrainskoi movy: v 4 t.* [Dictionary of the Ukrainian language: in 4 vol.] (1997). upor. z dod. vlasnoho materialu B. Hrinchenko. K.: Naukova dumka. 1: A–Zh. 494.; 2: Z–N. 588; 3: O–P. 516; 4: R–Ia. 616.

LDCE – *Longman Dictionary of Contemporary English* (2012). 5th ed. Pearson Education Ltd. 2082.

MNW – *Midden-Nederlands Woordenboek*. Retrieved from http://nl.wikipedia.org/wiki/Middelnederlandsch_Woordenboek.

Moliner, M. (1992). *Diccionario de uso del español* [Dictionary of spanish use]. Madrid: Gredos Editorial. 1. A–G. 1446.

NWDTEL – *New Webster's Dictionary and Thesaurus of the English Language* (1993). ed. Doris L. Lechner. Danbury, CT: Lexicon Publications, Inc. XXXI. 1149.

Ozhegov, S. I. (1990). *Slovar russkogo yazyika* [Dictionary of the Russian language]. 22-e izd., ster. M.: Rus. yaz. 601.

Poliuha, L. M. (2007). *Slovnyk synonimiv ukrainskoi movy* [Dictionary of Ukrainian language synonyms]. K. : Dovira. 477.

SOED – *The Shorter Oxford English Dictionary on Historical Principles* (1956). prep. by William Little, H. W. Fowler, J. Coulson; rev. & ed. by C. T. Onions. 3rd ed., rev. with addenda. Oxford at the Clarendon Press; Oxford University Press. 2515.

SUM – *Slovnyk ukrainskoi movy: v 11 t.* [Dictionary of the Ukrainian language] (1970–1981). red. kol.: I. K. Bilodid (hol. red.) ta in. K.: Naukova dumka. 1: A–V. 801; 2: H–Zh. 550; 3: Z. 744; 4: I–M. 840; 5: N–O. 840; 6: P–POITY. 83; 7: POIKhATY–PRYROBLIaTY. 723; 8: PRYRODA–RIaKhTLYVYI. 929; 9: S. 918; 10: T–F. 659; 11: Kh–. 700.

TSRYa – *Tolkovyiy slovar russkogo yazyika: v 4 t.* [Explanatory dictionary of the Russian language: in 4 vol.] (1935–1940). red. D. N. Ushakova. M.: Sov. entsikl.: OGIZ. URL: http://feb-web.ru/feb/ushakov/ush-abc/0ush.htm.

VD – Van, D. (1976). *Groot woordenboek der Nederlandse Taal: en 2 Dl.* [Comprehensive dictionary of the Dutch language: in 2 vol.]. red. C. Kruyskamp. 10-e dr. 's-Gravenhage: Martinus Nijhoff. I: A–N. 1575; II: O–Z. 1655 p.

VTSSUM – *Velykyi tlumachnyi slovnyk suchasnoi ukrainskoi movy* [Comprehensive explanatory dictionary of the modern Ukrainian language] (2001). uklad. i hol. red. V. T. Busel. K. : Irpin: Perun. 1440.

WFT – *Woordenboek der Friese Taal* [Dictionary of the Frisian language]. http://gtb.inl.nl/.

WNT – *Woordenboek der Nederlandse Taal* [Dictionary of Dutch Language]. http://en.wikipedia.org/wiki/Woordenboek_der_Nederlandsche_Taal.

**Бібліографічний опис:**

Леміш, Н. Є. (2018). Інтралінгвальні прототипні характеристики каузальних домінант у споріднених мовах. *Науковий часопис Національного педагогічного університету імені М. П. Драгоманова. Серія 9 Сучасні тенденції розвитку мов.* К. Вип. 17. С. 112–134. DOI: https://doi.org/10.31392/NPU-nc.series9.2018.17.09

***Анотація***

*Стаття присвячена визначенню інтралінгвальних прототипних характеристик каузальних домінант в англійській, нідерландській, іспанській, українській та російській мовах. Мета досягається шляхом вирішення таких завдань, як уточнення поняття "прототип" та "прототипна характеристика", ідентифікація каузальних семем для всіх каузальних домінант у досліджуваних споріднених мовах та приписування семантичних ролей всім елементам встановлених каузальних семем. Застосування низки лінгвістичних методів дозволило виконати всі завдання, а саме: контрастивного методу для обрання каузальної семеми за tertium comparationis з подальшим виявленням та зіставленням прототипних характеристик; структурного методу з методикою компонентного аналізу кожної каузальної домінанти на основі словникових дефініцій; когнітивного методу для моделювання ланцюгів семантичних ролей для кожної каузальної домінанти. Комплексна*

*методика уможливила моделювання трьох основних ланцюжків: [Ag +/ Eff + CAUSE + Pat +/ Rec +/ Instr]; [Ag +/ Eff + $BE_1$ + Pat +/ Rec +/ Instr]; [Ag +/ Eff + $BE_2$ + Pat +/ Rec +/ Instr].*

*Аналіз 1115 каузальних семем, ідентифікованих на основі даних з 24 словників 5 мов, дав змогу виявити прототипні характеристики для 10 каузальних домінант в англійській, нідерландській, іспанській, українській та російській мовах. Як наслідок, прототипні характеристики каузального комплексу в англійській мові включають Ag (5), Eff (33), Pat (2), Rec (34); каузального комплексу в нідерландській мові – Ag (8), Eff (33), Pat (9), Rec (29); каузального комплексу в іспанській мові – Ag (0), Eff (41), Pat (4), Rec (37); каузального комплексу в українській мові – Ag (7), Eff (36), Pat (8), Rec (35); каузального комплексу в російській мові – Ag (7), Eff (42), Pat (8), Rec (42).*

*Результати, отримані для інтралінгвальних прототипів в англійській, нідерландській, іспанській, українській та російській мовах, можуть слугувати основою для подальшої ідентифікації інтралінгвальних прототипів в інших мовах, а також для встановлення кослінгвальних прототипів для каузальних домінант у споріднених мовах, репрезентуючи універсальне і специфічне в картуванні каузальної дійсності різними етносами.*

***Ключові слова:*** *інтралінгвальний, прототип, протитипна характеристика, каузальна домінанта, каузальна семема, tertium comparationis (еталон зіставлення), семантична роль.*

**DOI:** https://doi.org/10.31392/NPU-nc.series9.2018.17.10
**UDC:** 81'23

**Luibov V. Shnurovska**
Kyiv National Linguistic University, Kyiv, Ukraine

# DYNAMICS OF SEMANTIC AND PRAGMATIC FRAMEWORK OF MODAL PROPOSITION: LINGUISTIC AND COGNITIVE ASPECTS

**Bibliographic Description:**

Shnurovska, L. V. (2018). Dynamics of Semantic and Pragmatic Framework of Modal Proposition: Linguistic and Cognitive Aspects. *Scientific Journal of National Pedagogical Dragomanov University. Series 9. Current Trends in Language Development*. Kyiv. Vol. 17. p. 135–147. DOI: https://doi.org/10.31392/NPU-nc.series9.2018.17.10

***Abstract***

*The article outlines the linguocognitive background for semantic and pragmatic structural dynamics of the modal proposition in planes of relevance, ambiguity, force dynamics, as well as possible worlds theories. The integrated theoretical approaches entailed the development of a relatively admissible algorithm for interpreting the modal values in a vast number of pragmatic frameworks. Due to the algorithm, a modal proposition incorporates a logical relation and a propositional domain. Logical relation integrates semantic denotation and pragmatic implication and presupposition into the linguistic coherence; whereas propositional domain represents human belief-desire system and encodes the factual or desirable state of affairs in root modalities and the individual's mental states – in epistemic modalities. Propositional domain permanently updates and extends due to the constant modelling of the novel mental inputs. Structurally, the propositional domain incorporates modal operators building the proposition into the contextual framework and linking it to another proposition, i.e. the restrictor.*

*We incorporate the notion of force dynamics to ground the link between the root and epistemic modalities. Here force serves as contributing or restricting facility to precondition the way root modalities encode the external reality and metaphorically transmit it into the language of thought producing epistemic modal values. In terms of the possible worlds theory we classified factual, regulative, desirable, and idealistic propositional domains to generally outline pragmatic extension of English modals. In the case study of distributional properties and pragmatic extensions of most commonly used English modals in their relationship to truth-conditional content, we speculated on and systematized the means via modal values such as necessity, ability, possibility, potentiality, ordering, desirability etc. are encoded in the live English speech.*

***Keywords:*** *modality, proposition, a domain of a proposition, a modal restrictor, a modal operator.*

## *1. Introduction.*

Modal values lexicalization and processing in the natural language is outlined in various logic and philosophy theories (Blakemore 1989, 1990; Ehrman 1966; Kratzer 1977, 1981, 1991; Palmer 1986; Perkins 1983; Sperber, Wilson 1996; Talmy 1988 et al.), who seek to show the fundamental connection between human language and mind. Various approaches in scientific

survey still debate about how the human brain accumulates, preserves and processes all the variability of lexical-semantic meanings. Many scholars (Barsalou 1989; Fauconnier 1985; Lyons 1977; Talmy 1988 et al.) consider that the mental lexicon has an extremely rich internal structure able to determine the process of the external world acquisition in accordance with the pragmatically marked individual choices and needs. By its nature, this structure is polysemous and incorporates clusters of interconnected concepts and categories relevant to various contextual updates of the lexical element. In this respect, modals act as a vivid manifestation of linguistic polysemy, and modal values in turn as specific constructs fundamental for human cognition.

In logic, philosophy and linguistics, two most ground modal values are distinguished (Bybee, Fleischman 1995; Coates 1988; Lyons 1977; Kratzer 1977, 1981, 1991; Palmer 1986, 1990 et al.) – epistemic and deontic. **Epistemic modality** encodes the range an individual perceives the factuality of the proposition; **deontic modality** denotes the propositional necessity or possibility

Besides epistemic and deontic values, Palmer (1986: 22) separates the **dynamic** (or circumstantial) **modality**, incorporating mental categories of factual ability, possibility, intention, desire, etc., as in the given propositions:

*(1) I CAN speak four languages* (ability, skill).

*(2) He COULD be the best basketball player ever* (circumstantial possibility).

Traditionally, deontic and dynamic meanings refer to **agent-oriented** or **root modality**, while epistemic to **speaker-oriented modality** (see Bybee, Pagliuca 1985; Bybee, Fleischman 1995).

Despite the fact that modality is a rather developed issue, in various plains, remains a number of empirical data to speculate. Therefore, at this phase of our survey, we **aim** to develop a dynamic conceptual framework of modality that will enable identifying the scope of the semantic and pragmatic variability of its operators within the propositional domain. To depict the versatility and dynamics of modal values in the scope of the theoretical approaches considered, we set two basic **objectives**: (1) to outline the lingo-cognitive theoretical ground for semantic and pragmatic framework analysis namely within the relevance, ambiguity, force dynamics, and possible worlds theories; and (2) via pragmatic extension, to analyse contextual dynamics of most widely used English modal operators.

***2. Modality in Relevance Theory.***

Methodologically, the ***relevance theory*** serves as a core basis to analyse semantic and pragmatic nature of modality (Blakemore 1989, 1990; Sperber, Wilson 1996 et al.). Generally, semantics relates to lexical values acquisition in the natural language processing; more specifically – lexical semantics characterizes the linguistically encoded meaning of a lexical item. This approach to language semantics is mentally oriented and primarily grounds on the issues of the *representational theory of mind* (Fodor 1981). First, the individual's mind perceives and processes the input data by constructing propositional representations in the language of thought; and, second, language is a specialized module in human mind aimed to convert natural language means into conceptual representations. In this plane, the grammatical structure of proposition topologizes language means into conceptual representations, i.e. into the logical form of the utterance. The logical form in turn is a specifically structured module – an algorithm to encode the language of thought.

Basically, linguistic display of logical forms consists in revealing the conceptual basis of a proposition. Therefore, system encoding of certain lexical items in a proposition gives access to the conceptual content of its modality (Sperber, Wilson 1996: 530–532). Ergo, we turn to key logical and philosophical theories (see Barsalou 1989; Papafragou 1997, 2006; Sperber, Wilson 1996) to work out the procedure for interpretation and identification of markers for modal conceptual values.

First of all, the modal proposition structure comprises the following entries: (a) ***logical***, resulting from certain logically structured deductive inferences of the subject; (b) ***encyclopaedic***, containing data about objects, events, properties, and other facts of the external reality, embodied in scripts, concepts and scenarios; and, finally, (c) ***lexical***, accumulating data on systemic and structural properties of natural-language items. Logical entries of modal values undergo *elimination rules*, enabling categorization and localization of a certain concept in the appropriate associative and semantic plane. Encyclopaedic entries incorporate most of the human knowledge about categories and phenomena of the real world represented in prototypes, i.e. category invariants. Lexical entries combine all natural-language means as a conceptual code (Sperber, Wilson 1996: 530–532).

Naturally, in the live speech, grammatical structure usually cannot fully encode the human mind implicity. Therefore, modal logic conventionally approach communication process as a set of *assumptions schemes* (see Sperber, Wilson 1996). The matter is that most commonly, the listener perceives grammatical structures of a proposition as a ground to comprehend only the hypothetical way of the speaker's thinking (i.e. propositional form of an utterance). Consequently, the listener's comprehension of the speaker's words may or may not correspond to the reality, as it is actually only an interpretive hypothesis grounded on particular pragmatic matters. Therefore, we assume that the ultimate point for processing the logical form of the utterance is a complete logico-conceptual representation, i.e. synthesis of the explicit and implicit structures of the utterance and real or possible world.

In cognitive account, the speech perception and comprehension, its semantic and pragmatic content, mostly match with linguistic encoding and assumptions. Due to the relevance theory, pragmatics exploits data derived from the grammatical structure of the utterance to ground the complete interpretation process. Obviously, such an interpretation of the semantic-pragmatic relation is not undeniable and complete. However, it is necessary to define to what extent the grammatical structure of the utterance relies on the input sensory modal stimulus and how much supplement of the non-linguistic data it needs to acquire the most factual propositional interface of the utterance the speaker intended to convey.

The fact that the natural language does not dispose enough means to fully convey the speaker's mind is neither random not trivial. Indeed, in evolutionary terms, it is quite reasonable that the lingo-cognitive economy results from the fragmentary conceptual representation of the human mind. However, due to the context-based extension of the lexical meaning, it becomes possible to open up the singular conceptual addressing in human memory pursuant to pragmatic manipulation (Barsalou 1989; Sperber and Wilson 1996; Papafragou 1997, 2006).

Obviously, every human relates to a certain mental and data environment, which accumulates particular properties and facts about the real world and its concepts. In the individual's mind, truthfulness or factuality and desirability are relevant to his way of thinking, which ultimately manifests the way he qualifies modal processes, both sensory and conceptual, as true or false. In this scope, human communication is for the most part a certain set of facts or assumptions more or less explicit to the relevant audience where the speaker usually intends to affect the listener, anticipating mental and emotional feedback of the latter.

Essentially, in communication processes the input stimulus triggers the individual to the extent it causes relevant cognitive effect (see Talmy 2000a, 2000b et al.). Sperber and Wilson (1996) separate three basic types of cognitive effects. First, the input stimulus results from the interaction with the previously acquired assumptions and leads to the pragmatically appropriate contextual implications; second, the input stimulus counterparts the acquired assumptions and results in elimination from the listener's mental repertoire; third, the input stimulus relates to the acquired assumptions and provides their enrichment in the individual's mental repertoire. The cognitive effects immensely depend on the stimulus accessibility, its form (perceptual or linguistic), length, and the assumptions accessibility in the recipient's mental repertoire. The

relevance of cognitive effects also relies on the balance between the acquired cognitive effects and efforts took to achieve the necessary results.

***3. Modality in Ambiguity Approach.***

In the live speech, modal values are commonly interpreted in more than one way. In every given case, modal values interpretation is more or less pragmatically predictable and selected from the vast repertoire of acquired values. This selection is usually intuitive which goes far beyond pure lexical ambiguity and multiplicity of values. Palmer (1990: 54) considers such a semantic non-singularity can pragmatically derive from root potentiality, which in turn routs the processing of all performative deontic meanings caused by pragmatic extension, rather than semantic decoding. It means that pragmatic extension of values, traditionally attributed to modals, greatly enriches their semantic range (Groefsema 1995).

In the ambiguity approach, Palmer (1990) separates four basic modalities – epistemic, deontic, dynamic and simple root modal meanings. For instance, *MAY* encodes **epistemic** and **deontic possibility**, i.e. permission, and **simple root possibility** (3a-c):

*(3) a. You MAY find this film absorbing.*

*b. You MAY go home.*

*c. The problem MAY be viewed from other perspectives.*

*CAN* denotes **simple root possibility** and **subject-oriented** (4a) or **neutral ability** (4b), **deontic possibility** (4c), and **command** (4d), as follows,

*(4) a. Fibs CAN speak out.*

*b. You CAN work it out.*

*c. Every Friday staff CAN dress casually.*

*d. Kim CAN forget about the vacation – she's messed the last project up.*

*MUST* conveys **subject-oriented** or **neutral necessity** (5a-c) as in the examples,

*(5) a. You MUST be kidding me.*

*b. The company MUST set it up right now.*

*c. The waiter just MUST go around with the trey.*

*SHOULD* encodes **contingent** or **conditional necessity** in any of epistemic or dynamic values (6a-b), although in the ambiguity approach, this modal verb can acquire 'highly deontic characteristics' (Palmer 1990: 82), for instance,

*(6) a. They SHOULD be coming later on today.*

*b. The doctor said I SHOULD really cut down on smoking.*

It is clear that modal ambiguity results not only from the lack of contextual information, but also from the subject-oriented origin of a neutral modal value. For this reason, performative values of modals should necessarily incorporate the following two basic aspects – *semantic labels* (Leech 2014) and *pragmatic extensions* (Palmer 1986, 1990). Due to pragmatic extension of semantic content, *CAN* encodes a **subject-oriented dynamic ability** (7a-b) as in the given examples:

*(7) a. Rachel CAN speak Spanish and Portuguese.*

*b. Rachel CAN speak Spanish and Portuguese at the webinar, because everybody is going to understand her.*

According to Palmer (1986, 1990) and Leech (2014), we can conclude that 'traditional' modal values are actually 'by-products' of speech perception and comprehension, rather than the stable and basic semantic information that guides any pragmatic interpretation. This view allows to speak of a certain illocutionary force of modals' semantics and pragmatics, that goes far beyond lexical ambiguity.

***4. Modals in Force-Dynamics Theory.***

Modals' polysemy and wide interpretation range mostly depend on blurred margins between their nucleus and peripheral semantics (Coates 1988: 425–434). In the cognitive paradigm, the modals' polysemy synthesizes in the *metaphorical mapping* from the individual's concrete external socio-physiological experience up to the abstract inner world of his mind and

mental processes in general. Such a way to explain the modal semantics nature grounds on ***force-dynamics theory*** (Talmy 1988, 2000a, 200b). Here root modalities incorporate the notion of **force** to denote the external world and metaphorically transmit it into the human mind producing epistemic modal values.

Therefore, *MAY* and *MUST* encode the **force** as a contributing or restricting facility affecting the way of thinking and reflecting the root (8a-b) and epistemic (8c-d) modal values, such as:

*(8) a. You MAY purchase the house you want* – It is not forbidden to purchase a house someone is interested in;

*b. You MUST be back by Saturday (Our parents said so)* – Parental authority forces someone to return to Saturday;

*c. Rachel MAY have done the dishes in the meantime* – There is no reason to doubt that Rachel has washed the dishes.

*d. You MUST have had a great time on Barbados* – The available evidence suggests that someone really had a good time on Barbados.

Essentially, the metaphorical mapping of modal concepts differs substantially from other types of mapping, motivating lexical polysemy. In case of conceptual modality, its semantics primarily is enforced by all possible sensory modalities associated in a corresponding way with metaphorical mappings. Thus, sensory modality, incorporating necessary psychological feedbacks and mechanisms, precedes the linguistic tendency of producing the input stimulus value. This process can be described in terms of *the internal world metaphorical construal*, based on perceiving and reasoning of the external world (Sweetser 1990: 23).

The common drawback of ambiguity and force-dynamics theories is that they do not consider the intuitively obvious link, on the one hand, between necessity and obligation in the semantic value of *MUST*; and, on the other hand, between possibility and permission in the semantic value of *MAY* (Lyons 1977: 791).

***5. Modality in Possible-Words Theory.***

Due to the theoretical approach provided by Ehrman (Ehrman 1966), Haegeman (Haegeman 1983) et al., Kratzer (Kratzer 1977, 1981, 1991) considered modals in the plane of **possible-worlds theory** and separated three basic modal operators: the modal relation, the modal base and the ordering source.

The modal relation incorporates possibility and necessity concepts. The modal base (or *conversational background*) involves assumptions allowing to acquire the modal relation; they are commonly implicit although can become explicit via expressions such as, *from the point of view*, *from the perspective of*, etc. In possible-worlds theory, epistemic modal values ground on what is known; teleological – on what is predetermined by certain aims and objectives; deontic – on what is ordered; bouletic – on what is desirable. Relevant modal values variability is in the following examples of *MUST*:

*(9) a. Monika MUST be Ross's sister: they have the same eyes* (available evidence).

*b. Chandler MUST buy a car to get to and from Tulsa every week* (obvious goal).

*c. You MUST leave right at the moment* (direct order).

The above modal meanings are elements of possible worlds, which in turn define the modal operator. In the live speech, modal meanings are contextual and the type of modal base relevant to their interpretation is pragmatically motivated. Obviously, when interpreting any given modal proposition, it is impossible to consider all possible worlds incorporated in the modal base. As for instance, in proposition (8a), due to some assumptions, the speaker does not consider the possibility that Monika and Ross have the same eyes, as some of them may use contacts; or maybe the fact that they have same eyes is just a coincidence. The matter is the ordering source make us rank alternative worlds in relation to their proximity to the common state of affairs and to determine the degree of their deviation considering what looks most

common to the given real world (Lewis 1975, 1981). Therefore, modal value of *MUST* encodes the **unambiguous allowability** of the family relationship between Monika and Ross.

Regardless of the ontological status of possible worlds, their acquisition and representation are cognitive, and therefore, subjective. As for the relevance theory, it can be, along with some other theories, a good try to overcome the gap between modal semantics and pragmatics as it takes *evidentiality* for the relevance criteria which in fact comprises both sensory and conceptual modalities (Groefsema 1995). Let us consider the following example:

*(10) Rachel and Ross MUST be married.*

Here epistemic *MUST* encodes the relevant possibility, that Rachel and Ross are married for they are going to have a baby and they live together that is *evident*.

The synthesis of the above theories allows to derive a relatively universal formula to interpret modal propositions. Therefore, scientists (Sperber, Wilson 1996; Papafragou 1997, 2006 et al.) assume that the semantics of a modal proposition ***P*** incorporates two elements: 1) a **logical relation *R*** – the *entailment* for correlation between semantic denotation and pragmatic implication and presupposition, as well as *linguistic coherence*; and 2) a **propositional domain *D***. Schematically, the modal proposition can be depicted as follows:

***R(D, p)***.

This formula reflects the general three-component structure necessary for analysing a number of quantificational devices in the natural language, such as conditionals, when-clauses, quantificational determiners such as *everyone, all* or adverbs such as *always*, *generally*, *often* etc. (Lewis 1975; 1981). Still, the explanation of the modal value structure demands the following expanded tripartite formula (Krifka, Pelletier, Carlson, ter Meulen, Link and Chierchia 1995):

***O(rm)***.

Here the **modal operator O** builds a proposition into the **matrix M** and links it to another proposition – the **restrictor R**. In modal propositions, the operator is a logical relation (entailment or coherence), the matrix – an entailed utterance, and the restrictor – the domain of the proposition, relevant to the matrix, which defines various types of modal values encoded in multiple communication contexts.

In the live speech, modal restrictor is linguistically encoded in a particular way, as in the proposition (11a), or is represented as a pragmatic inference (guess, assumption, etc.), as in the proposition (11b):

*(11) a. As you betrayed me, we MUST split up.*

*b. We MUST split up.*

Regardless of the linguistic encoding of a restrictor in the explicit structure of a modal proposition, the semantic content of a modal element potentially refers to other possible restrictors it is logically related with. Herewith, the modal input stimulus may not point to any other restrictor, leaving its specification in pragmatic plane. One way or another, modal values and relations are specified, both synchronically and diachronically, via explicit and implicit restrictors that define the semantics of every propositional element, as well as the overall proposition.

***6. Propositional Domain as a Modal Restrictor.***

Any given modal category can be represented as a domain due to the corresponding semantic or pragmatic sense via encoding means of any particular language. Due to Sperber, Wilson (1996) and Papafragou (1997, 2006) et al., we assume modal propositions are input, configured, preserved, and represented in the human language cognition, reflecting the truth-conditional nature of the state of affairs in the factual world. Modal proposition is actually and most commonly a *factual assumption* (in relevance theory it is viewed as the *descriptive use of proposition* (see Sperber, Wilson 1996)). **Factual domain** (or factual assumption) is a general concept of the real or possible world that has two main types of linguistic encoding. *First*, factual data describe large-scale empirical generalizations regarding the whole groups of objects and phenomena; *second*, specific factual data, conditional or idealistic modal propositions, represent

individual objects and phenomena related to their certain temporal-spatial modes. Noticeably, the factual assumption is the default and basic means facilitating human communication, since it preforms the rich and accessible contextual background. This background in turn supplies lingo-cognitive processing of incoming modal stimuli immediately after their sensory perception and identification.

Modal propositions describe not only the factual world (in its past, present, or future manifestations), although primarily relevant to a single factual domain, but also reflect the state of affairs in relation to the stereotype and regulatory world constructing **regulatory domain**. This domain incorporates in the first place moral and ethical norms or convictions, generally accepted rules and laws, orders, prescriptions, instructions, codes, conventions, etc., which constitute the '*purpose-specific internal module*' for any given individual as a representative of a particular macro- and micro-community (Premack, Premack 1994).

Other types of the propositional domains also include modalities handled as descriptions of states of affairs in worlds *desirable* or *idealistic* from someone or other's point of view. In fact, **desirability domain** is a tripartite predicate (interconnecting *speakers* ↔ *setting* ↔ *listener*), where the speaker usually prioritizes the assumption as a description of a setting in the world *desirable* from his own perspective or from the point of view of another person. Finally, **idealistic domain** encodes abstract representations/hypotheses or abstract representations of representations, which is a sample of what the relevance theory claims the *interpretative use of propositions* (see Sperber, Wilson 1996). Here, the main structural property of modal propositions belongs to in-built indexes (Kuroda 1982) (other terms – *mental spaces* (Fauconnier 1985) or *domains of discourse* (Recanati 1996)). In factual assumptions, these indexes equal zero, since these assumptions are the most natural representation of the real world. Yet other types of assumptions ground on the description and correlation of the real and alternative worlds in the human mind.

Consequently, we assume the **propositional domain** is a specifically organized human belief-desire system with a rich internal structure permanently updated and extended due to the novel mental areas modalizing. In the root interpretative plane, propositional domains incorporate modalities encoding the factual state of affairs; in the epistemic – the individual' mental states. This does not mean that subjective views no longer remain truth-conditional properties of the state of affairs. However, the truthfulness range of modal propositions is relevant to the modal restrictor catalysing reality and human mind so it is more or less obvious how much of the factual proposition is compatible with the settings or facts of the real external world.

To maintain a framework for modality, propositional domains set a notional space, which fulfils the following objectives. First, it grounds the pragmatic computation of restrictors for modal relations. Second, it establishes a *conceptual pool* for grammaticalisation processes – a set of recurrent conceptual variants, methods and purposes to precondition perception and comprehension of a *new* input stimuli that undergoes permanent mutation and selection due to internal and external reasons, and overall results in the conceptual algorithm mutation. Therefore, the propositional domain becomes a practical tool for describing and comparing modal elements used in the plane of mono- and polylingualism to trace the diachronic development of modal values in general. Even if it is inappropriate to consider the propositional domain to be the basic linguistic structure underlying grammaticalisation, still it plays a decisive part in establishing of semantic values, since it marks the modal structure.

***7. Semantic Values of Modal Operators.***

Semantic values of most commonly used English modals *MAY*, *CAN*, *MUST*, and *SHOULD* undergo various pragmatic modifications encoded in numerous interpretations of propositions. For instance, in the modal proposition (11), most appropriately *MAY* encodes the ability/capability to gain adequate cognitive effect in a manner compatible with both speaker and listener's capabilities and pReferences

*(12) The migration service MAY cancel the decision on your depot, you only need to provide a certificate of marriage to confirm your matrimonial status.*

In modal propositions (12a-c), *MAY* encodes the **presence** or **absence** of a certain conditional **barrier**:

*(12) a. Monika and Chandler are engaged, so they MAY start making arrangements for the wedding.*

*b. To make lasagna, any sort of tomato sauce MAY be used.*

*c. I told my students, during the seminar, they MAY interrupt me as often as they need.*

Proposition (12a) indicates the ability of starting making arrangements for the wedding related to the overall evident circumstances. Example (12b) encodes certain recipe deviation or variability acceptable in a particular normative domain. In our opinion, we should a bit more speculate on the modal value of (12c). We may assume the lecturer himself has made a proposal. In the given case, students can interrupt the lecture if he does not mind. Here the propositional domain determines the semantic value of the modal verb in the way preferable for the very lecture. Thus, even if students interrupt the lecturer as often as *they* find it necessary, the lecturer still is the prior authority at the seminar, and thus his decision can be interpreted as **permission** (or elimination of the barrier).

There is a common belief that the recurrent modal value of *CAN* is **potentiality** (Bolinger 1989), which the real world usually presupposes, as for instance:

*(13) PPP CAN co-occur with more traditional forms of computer-based learning.*

Modal proposition (13) encodes potentiality due to quite real circumstances such as, maybe, (a) total and accessible technical support for schooling, (b) teachers' encouraging position, or (c) the recommendations from the education department.

The value of **ability** commonly prescribed to *CAN*, we consider (due to Foolen 1992) does not fully correspond to the root meanings of the verb as it derives from enrichment of its semantic value due to various interpretations of potentiality. Consider the following examples:

*(14) a. Rachel CAN speak Spanish and Portuguese.*

*b. Rachel CAN speak Spanish and Portuguese at the webinar, because everybody is going to understand her.*

Given propositions indicate to a certain property of Rachel along with some other qualities and skills of hers. Evidently, the factual scope of the proposition (14a) differs from the proposition (14b) by the fact that the situation the former describes justifies the well-known fact – Rachel speaks Spanish and Portuguese. Proposition (14b) is characterized with the richer factual domain – besides Rachel's qualities it also exploits the very situation of the meeting and the qualities of its other participants (obviously, they also speak Spanish and Portuguese). Therefore, the proposition (14b) does not encode the ability in its 'pure' sense as opposed to the proposition (14a).

The value of **potentiality** delegated to *CAN* may be interpreted as a particular subject or object's property in the proposition, which implies some specific and broader factual considerations with respect to this property. Moreover, in case there are no restrictions for the semantic value of *CAN* within the potentiality domain, we can speak of its naturally predicted root potentiality, which will conceptually join every given individual property in the proposition, for instance:

*(15) a. Hurricane CAN smash the crops.*

*b. The project CAN be split into several micro-projects.*

This approach explains the relation between *CAN* and *BE ABLE TO*, where the latter encodes a natural ability/skill relevant or irrelevant to the individual's desires and wishes, as in the example below:

*(16) a. Ted CAN/IS ABLE TO meet deadlines, if he likes.*

*b. We CAN/ARE ABLE TO offer you a suite room, if you wish.*

Next, we consider **suggestion** and **offer** as a recurrent modal value of *CAN*. This interpretative value presupposes the following contextual assumptions: (a) a proposition represents a state of affairs definitely desirable or beneficial for both the speaker and the listener; (b) the speaker is responsible for ensuring the state of affairs described in the proposition; and (c) the speaker takes no obligation to ensure this state of affairs, as for instance:

*(17) a. We CAN have a drink on Friday.*

*b. I CAN give you a lift.*

Finally, *CAN* and *MAY* encode the deontic value of **permission**, as in the given propositions:

*(18) a. In Tulsa, you CAN smoke in the room unless someone does not like it.*

*b. You MAY smoke in this room.*

Let us suppose the given contextual assumptions are mutually transparent for the speaker and the listener. In this case, the state of affairs when the listener smokes in the room (a) is desirable in the speaker's view; (b) is within the speaker's powers; or (c) the listener has particular manipulative power on the speaker. Therefore, the modal proposition (18a) encodes the speaker informs the listener that in fact there are no obstacles that would prevent him from smoking in the room. In other words, the circumstances are that he is allowed to smoke. Instead, the modal proposition (18b) shows that smoking in the room is compatible not only with the speaker's powers but also with his preferences.

As a rule, this interpretation grounds why *MAY* is considered to be a more polite form of permission unlike *CAN* as the former encodes greater involvement of the speaker himself. However, this is not always the case. For instance, let us assume in the utterance (19) the commander reveals a permission, although given the mandatory rules in the military discipline, the soldier is obliged to go home rather than he is allowed to do so:

*(19) You MAY go home, Terence.*

This is the case of *'context-induced reinterpretation'* within a particular grammaticalisation chain (Heine 1995). Here, the context virtually rejects the assumption (let us label it the assumption *z*) that the chance to go home is desirable for Terence himself. Actually, the fact that Terence acts as the *object* of the conversation automatically presupposes the opposite view: he cannot go home freely having no permission. However, it is difficult to grasp what was the commander's intension and whether this intention was optimally relevant to Terence's, unless the commander believed or knew that the assumption *z* was true. In the given situation, the assumption *z* can be interpreted only as a background relevant to the assumption of the subject of the proposition (for instance, he knows that the assumption *z* is false). Although there is no contextual precondition, there is no reason to suppose that the commander deliberately ignores the soldier's wish. In the same way, we know nothing if Terence had previously appealed to gain the permission to go home. Possibly, *MAY* can encode some negative sense if the commander orders Terence to leave the military base as a disciplinary punishment being as subjected to a removal from military service. In this case, let us suppose *MAY* encodes a one-way rejection of the formal communicative protocol in the way of top-bottom subordination relevant to the commander's strong dissatisfaction by Terence's military service.

Similar meaning conveys the following modal proposition:

*(20) a. You CAN forget about holidays – you did poorly at school.*

*b. You CAN start looking for a new job.*

Modal connotation of *MUST* can be rather clearly considered in the following propositional domain:

*(21) I MUST sneeze.*

The most logical interpretation of this utterance may be as follows: Monika sneezing is a natural reaction for being cold, given, for example, the low air temperature and physical condition caused by the factor. Here, the modal domain specification *narrows* the very

proposition to the factual value. On the contrary, the following propositions contextually *extend* the semantic value of *MUST*:

*(22) a. To start a football match, one player MUST kick the ball from the middle of the filed.*

*b. The candidates MUST stop the campaign in a week before the President election.*

*c. You MUST remain silent throughout the trial. Let your lawyer talk.*

All of the above given propositions relate to the normative domain of various types and encode the **necessity** in relation to the rules of the football game (22a), the constitutional rules (22b) and the proceedings of court sessions (22c).

The modal *MUST* also conveys restrictive or circumstantial value, i.e. necessity, as in the following cases:

*(23) I (Amy) MUST lose weight.*

Let us assume slimming relates to Amy's need or desire to become attractive. The proposition of this type is qualified as a *practical syllogism* and conveys faith or conviction in the appropriateness of certain actions relevant to the particular intent (Kratzer 1981, 1991). Practical syllogism has roughly the following general structures:

*(24) a. I want to attain **y**.*

*b. Unless **z** is done, **y** will not be attained.*

*в. Therefore, **z** must be done.*

Considering the given practical syllogism, we can extend the proposition (23) as follows:

*(25) a. Amy wants to become attractive.*

*b. Unless she loses weight, Amy will not become attractive.*

*c. Therefore, Amy MUST lose weight.*

Consequently, slimming for Amy is an unavoidable precondition to achieve her purpose; this is the very necessity *MUST* encode.

However, in the following proposition we can witness *MUST* acquiring a **deontic obligation-imposing** value:

*(26) You MUST transcribe 'favourable' twenty times, unless you learn to do it perfectly well.*

In the given case, *MUST* reveals the **powers** of the subject in the normative domain making emphasis on his ordering and instructing authority. It is also obvious that the subject is empowered to highlight the state of affairs in the proposition.

In addition, obligatory *MUST* encodes **imperative suggestions** or **offers**:

*(27) a. We MUST go for a drink one day.*

*b. I absolutely MUST give you a lift.*

*c. You MUST come and see Emma sometime.*

In the utterance (27a), the speaker offers his companion to go for a drink sometime. Given that the listener must accept the speaker's offer due to the social status of their relationships, we can interpret the proposition as an urgent proposal.

Unlike *MUST*, the modal verb *SHOULD* usually denotes an **obligation** or certain established **rules** of a weaker sense, such as:

*(28) She eats. She drinks. So, once in a while, she SHOULD do the washing up.*

In the plane of the proposal domain, *SHOULD* commonly encodes a necessity relative to existing stereotypes, norms or expectations. The modal value of *SHOULD* relies quite heavily on the sort of structured knowledge humans acquire in their everyday life. In the human logical-semantic system, the acquired normative knowledge attains its regulatory status, so that the root value of *SHOULD* approximates *MUST*. Still, *SHOULD* tends to encode what is more expected or normal, which reduces its status of prescription or urgent kind of necessity and makes it indistinguishable from *OUGHT TO*, as a moral and ethical norm, for example:

*(29) You SHOULD/OUGHT TO respect your parents.*

As we known (see Warner 1993), *SHOULD* eventually aligned its original status as the past form of *SHALL* and entered the modal system as a separate item. Still, the verb can be used in the numerous ways, which continue to preserve some sense of its original meaning, unrelated to secondary interpretations (Ehrman 1966; Coates 1983; Palmer 1990). Therefore, *SHOULD* is used in ways similar to a hypothetical *WOULD* (30a), as a hypothetical marker with inverted word order (30b), or as zero contribution to meaning in the quasi-subjunctive construction (30c):

*(30) a. I SHOULD be grateful if we could forget about it.*

*b. SHOULD you require any further recommendations, please feel free to tell me.*

*c. Fibs does not like, that she SHOULD be left alone over the weekend.*

Finally, contrasting semantic values encoded by *MUST*, *SHOULD* and *OUGHT TO* we see the following:

*(31) In this game, you MUST/SHOULD/OUGHT TO kick the ball to the player next to you.*

*(32) Chief scout to the reporter:*

*a. You MUST pass the article by midnight, although it is fine if you don't.*

*b. You SHOULD pass the article by midnight, although it is fine if you don't.*

*c. You OUGHT TO pass the article by midnight, although it is fine if you don't.*

Therefore, in the proposition (31), *MUST* does not have any semantic constraints and matches the normative propositional domain of the rules of the game. *SHOULD*, nevertheless, has its individual modal-semantic specificity and shades the proposition in somewhat different manner. Although the rules of the game are mandatory and constitute a regulatory limitation domain, one can assume that this particular game may be far from the common gaming activity (for example, a game on a playground, etc.). Since there are no contextual hints about prescriptiveness of the game rules, *SHOULD* and *OUGHT TO* have less urgent and more recommendatory meaning.

On the contrary, the modal proposition (32a) denotes the commitment due to a number of contextual assumptions regarding the editor's authority and the reporter's duties. In the utterance (32b), the editor communicates his expectations regarding the task to be done by the reporter so that there is no contextual hint of pressure or authority on the part of the editor as for the task performing. Finally, the proposition (32c) encodes the editor's priorities or particular considerations regarding the publishing deadlines and the quality/fulfilment level of the reportage done by one of his subordinate, depending on what the editor can accept for the finished reportage.

Consequently, a detailed outline of the modal values encoded by most widely used modal operators, considered in the plane of the relevance, ambiguity, force dynamics, and possible worlds theories, shows that the discrepancy in contextual interpretations can be adequately predicted by extending their semantic structure, as well as through a multifunctional and powerful pragmatic devises. Moreover, the considered modality theories clearly demonstrate the ability to show all its semantic multidimensional nature due to concrete contextual assumptions that derive from the nature of social relations and the logical inferences of the communicants.

Hereby, we can claim that the semantic and pragmatic interpretation of the modal values can go beyond their traditional lexical ambiguity and polysemy, which points to the powerful illocutionary power of their semantics and pragmatics. Considering the propositional domain as a modal restrictor, we have identified its basic types as factual, regulatory, desirable, and idealistic. Modal domain as a context interpretive scope encodes a vast diversity of epistemic, deontic and dynamic values of English modal operators, namely possibility, ability, permission, intention, ordering, potentiality, necessity, etc.

## ***References***

Barsalou, L. (1989). Intra-concept similarity and its implications for inter-concept similarity. *Similarity and analogical reasoning*. 76–121.

Blakemore, D. (1989). Denial and contrast: a relevance theoretic analysis of BUT. *Linguistics and Philosophy*. 12. 15–38.

Blakemore, D. (1990). Performatives and parentheticals. *Proceedings of the Aristotelian Society*. 197–213.

Bolinger, D. L. (1989). Extrinsic possibility and intrinsic potentiality. *Journal of Pragmatics*. 13. 1–23.

Bybee, J., Fleischman, S. (1995). Modality in grammar and discourse: An introductory essay. *Modality in grammar and discourse*. 1–14.

Bybee, J., Pagliuca, W. (1985). Cross-linguistic comparison and the development of grammatical meaning. *Historical semantics and historical word-formation*. 59–84.

Coates, J. (1988). The acquisition of the meaning of modality in children aged eight and twelve. *Journal of Child Language*. 15. 425–434.

Ehrman, M. (1966). The meanings of the modals in present-day American English. *Linguistics*. 28(4). 46–58.

Fauconnier, G. (1985). *Mental spaces: Aspects of meaning construction in natural language*. Cambridge, MA and London: MIT Press. 190.

Fodor, J. (1981). The present status of the innateness controversy. *Representations*. 257–316.

Foolen, A. (1992). Review of Sweetser. *Lingua*. 88/1. 76–86.

Groefsema, M. (1995). Can, may, must and should: A relevance theoretic account. *Journal of Linguistics*. 31. 53–79.

Haegeman, L. M. V. (1983). *The semantics of will in present-day British English: a unified account*. 179.

Heine, B. (1995). Agent-oriented vs. epistemic modality: Some observations on German modals. *Modality in grammar and discourse*. 17–53.

Krifka, M., Pelletier, F., Carison, G., Meulen, A. ter, Chierchia, G., Link, G. (1995). Genericity: An introduction. *The generic book*. 1–124.

Kratzer, A. (1977). What 'must' and 'can' must and can mean. *Linguistics and Philosophy*. 1. 337–355.

Kratzer, A. (1981). The notional category of modality. *Worlds, words, and contexts*. 38–74.

Kratzer, A. (1991). Modality. *Semantics: An International Handbook of Contemporary Research*. 639–650.

Kuroda, S.-Y. (1982). Indexed predicate calculus. *Journal of Semantics*. 1. 43–59.

Leech, G. (2014). *Meaning and the English verb*. London: Longman, Routledge. 152.

Lewis, D. (1975). Adverbs of quantification. *Formal semantics of natural language*. 3–15.

Lewis, D. (1981). Counterfactuals and comparative possibility. *Conditionals, belief decision, chance, and time*. 57–85.

Lyons, J. (1977). *Semantics*. Cambridge: Cambridge University Press. 897.

Palmer, F. (1986). *Mood and modality*. Cambridge: Cambridge University Press. 236.

Palmer, F. (1990). *Modality and the English Modals*. London and New York : Longman. 256.

Papafragou, A. (1997). Modality in language development: A reconsideration of the evidence. *UCL Working Papers in Linguistics*. 9. 77–105.

Papafragou, A. (2006). *Epistemic modality and truth conditions*. London: Lingua. 1688–1702.

Perkins, M. R. (1983). *Modal Expressions in English*. London: Frances Pinter & Norwood. 192.

Premack, D., Premack, A. (1994). Moral belief: Form versus content. *Mapping the mind: Domain specificity in cognition and culture*. 149–168.

Recanati, F. (1996). Domains of discourse. *Linguistics and Philosophy*. 19. 445–475.

Sperber, D., Wilson, D. (1996). Fodor's frame problem and relevance theory. *Behavioural and Brain Sciences*. 19. 530–532.

Sweetser, E. (1990). *From etymology to pragmatics: metaphorical and cultural aspects of semantic structure*. Cambridge: Cambridge University Press. 174.

Talmy, L. (1988). Force dynamics in language and cognition. *Cognitive Science*. 2. 49–100.

Talmy, L. (2000a). T*oward a Cognitive Semantics. Volume I: Concept Structuring Systems*. Cambridge, Massachusetts, London: The MIT Press. 565.

Talmy, L. (2000b). *Toward a Cognitive Semantics. Volume II: Typology Patterns in the Representation of Event Structure*. Cambridge, Massachusetts, London : The MIT Press. 495.

Warner, A. (1993). *English auxiliaries: Structure and history*. Cambridge: Cambridge University Press. 291.

**Бібліографічний опис:**

Шнуровська, *Л.* В. (2018). Динаміка семантичної і прагматичної структури модальної пропозиції: лінгвокогнітивний аспект. *Науковий часопис Національного педагогічного університету імені М. П. Драгоманова. Серія 9 Сучасні тенденції розвитку мов*. К. Вип. 17. С. 135–147. DOI: https://doi.org/10.31392/NPU-nc.series9.2018.17.10

***Анотація***

*У статті представлено лінгвокогнітивну основу семантичної та прагматичної структурної динаміки модальних пропозицій у площині теорій релевантності, неоднозначності, силової динаміки та можливих світів. Такий інтегрований теоретичний підхід дозволив розробити відносно універсальний алгоритм інтерпретації модальних значень, актуалізованих у різних прагматичних площинах. Відповідно до алгоритму, модальна пропозиція включає в себе логічне відношення і пропозиційне поле. Логічне відношення інтегрує семантичну денотацію і прагматичну імплікацію та пресупозицію, що виражається в лінгвістичній когерентності, тоді як пропозиційне поле становить систему переконань-бажань людини, що виражає фактичний або бажаний стан справ у кореневих модальностях та психоемоційний стан людини – в епістемічних. Пропозиційне поле безперервно оновлюється та розширюється у зв'язку з постійною модалізацією нових вхідних стимулів. Структурно пропозиційне поле включає модального оператора, який інкорпорує пропозицію в контекстну структуру та пов'язує її з іншою пропозицією, тобто рестриктором.*

*У дослідженні застосовано категорію силової динаміки, щоб пояснити зв'язок між кореневими та епістемічними модальностями. В цій площині сила служить сприятливим чи обмежувальним засобом, який показує, як кореневі модальності кодують зовнішню реальність і метафорично транслюють її в мові думки, формуючи епістемічні модальні значення. У термінах теорії можливих світів запропоновано класифікацію пропозиційного поля як фактичного, регулятивного, бажаного та ідеалістичного, щоб загалом показати прагматичне розширення англійських модальних операторів. В аналізі дистрибутивних властивостей та прагматичних розширень найбільш уживаних англійських модальних дієслів у їх співвідношенні з правдиво-умовним змістом пропозиції описано та систематизовано засоби вираження таких модальних значень, як необхідність, здатність, можливість, потенціальність, наказовість, бажаність тощо в живому англійському мовленні.*

***Ключові слова:*** *модальність, пропозиція, пропозиційне поле, модальний рестриктор, модальний оператор.*

**DOI:** https://doi.org/10.31392/NPU-nc.series9.2018.17.11
**UDC:** 81-112:316.772.2

**Alla A. Zernetska**
National Pedagogical Dragomanov University, Kyiv, Ukraine

# SYNERGETICS OF VERBAL-COMMUNICATIVE ACTIVITY: THE PHILOSOPHY OF SYSTEM DEVELOPMENT IN DIACHRONY

**Bibliographic Description:**

Zernetska, A. A. (2018). Synergetics of Verbal-Communicative Activity: the Philosophy of System Development in Diachrony. *Scientific Journal of National Pedagogical Dragomanov University. Series 9. Current Trends in Language Development*. K. 17. C. 148–164. DOI: https://doi.org/10.31392/NPU-nc.series9.2018.17.11

***Abstract***

*The first known model of verbal communication was proposed by Aristotle in science, but this direction began to be develop actively only in the XX century. During the study of language as a form of the realization of VC researchers have built new and refined already known models: information, code, semiotic, performative, language and others. Thus, they completed the overall picture, but they did not explain the connection of all elements of VC as a single system, which generates an endangered result, as well as they did not take into account the entire composition of elements of VC, which includes consciousness, thinking and experience (knowledge and skills). However, the amount of accumulated scientific knowledge through the isolation and location of research does not give answers to the basic questions of philosophy of language, linguistics and psychology in understanding the connection of consciousness, thinking, experience (knowledge and skills) and language (as the second signalling system). The verbal communicative activity is polydimensional and multidimensional. It means that the presentation and study of it in a linear form is not enough. The proposed review of the models known to science and the reference to the systematic analysis of the components of the VC (linguistic (language), psychological, cognitive, intellectual, psychophysical, as well as social aspects of the personality of the communicant) provides the basis for developing a synergistic model of VC as a functional system that would show an interconnected link of the functioning of consciousness, thinking, experience (knowledge and skills) and language (second signalling system).*

***Keywords:*** *philosophy of language, verbal communication, models of verbal communication, system of verbal communication, language and consciousness, language and thinking, language and experience (knowledge and skills).*

## *1. Introduction.*

The twentieth century is marked by a rapid convergence of Philosophy and Linguistics as a result of their close interest in the semantics of natural language. The extension of new ideas in the Philosophy of Language dealing with the sense and meaning of the linguistic sign along with the achievements of Cognitive Psychology and contemporary linguistic studies is of high

informative value. It is due to their ability of interpreting the number and quality of "atomic facts" (after (Wittgenstein 1994)) "bound" to linguistic signs and extralinguistic procedures (strategies, tactics, methods) implemented.

However, the amount of accumulated scientific knowledge, determined by the isolation and localization of research, does not answer the basic questions of the Philosophy of Language, Linguistics, and Psychology regarding the understanding of the connection between cognition, mentality, experience (skills and knowledge) and a language (the second signal system). The only common thing for all the scientific areas, although in different interpretations, is the recognition of the systematicity and activity as the conditions for the manifestation of the above mentioned "quartet". It can be easily proved by the existence of such a phenomenon as verbal communication (VC). As a result, in the scientific and educational literature, including works in *Communicative Linguistics*, or *the Theory of Verbal / Speech Communication* (TVC), a new and actively developing area of Linguistics, which covers almost all the aspects of linguistic research, it is possible to find only consolidation of various VC aspects (see: F. S. Batsevich, L. V. Volodina & O. K. Karpukhina, M. A. Vasilik, O. Ya. Goykhman & T. M. Nadeina, V. B. Kashkin, Yu. V. Kosenko, V. V. Krasnykh, A. P. Moiseeva, G. G. Pocheptsov, Zh. V. Nikolaeva, Ye. A. Selivanova, S. V. Shpakovskaya i V. O. Shpakovskiy). Although studying the language as a form of VC realization and trying to present a general picture, the researchers built new and modified already known communication models (information-code, semiotic, performative, speech, etc.), they failed to explain the connection of all VC elements as of a single system, generating an emergent result, neither did they take into account the full set of VC elements, including cognition, mentality, experience (skills and knowledge). As opposed to the aforementioned, the results of our studies provide all the grounds for considering the VC as a performative system uniting all the necessary factors.

The first known to science model (an informative one) was proposed by Aristotle in the fourth century BC (Aristotle 1978), but most actively this issue was worked on only in the twentieth century. In search of a system capable to unite all the elements, we analyzed the dynamics of the VC model development from the standpoint of various contemporary schools, i.e. of the systems theory. Such an approach was determined by the rapid change of the scientific paradigm in the middle of the twentieth century, when the general scientific multiple-theoretic approach gave way to the systemic one, and in Linguistics – to communicative and performative approach. At the present time, *systematicity* and *motion* as common properties of matter and the form of its existence (including human practices and thinking) are recognized as the basis of the general scientific paradigm (see: L. von Bertalanffy, J. V. Blauberg, A. A. Bogdanov, E. de Bono, P. Drucker, A. N. Malyuta, L. la Rush, G. Simon, V. N. Sadovskiy, R. I. Feidzhin, A. D. Hall, A. Chandler, S. A. Chernogor, E. G. Yudin). VC being a type of human activity is not an exception either and is considered a system (Glukhov, Kovshikov 2007). Besides within the framework of the general systems theory, speech communication is recognized as a supercomplex system (Marca 1993).

The system is usually defined as internally and externally coherent, separated from the environment and the target-oriented entity of interacting elements (see: L. von Bertalanffy, P. Senge, E. Akoff, O. Lange, M. Setrov). This definition is quite general and does not reflect the features of the entire variety of systems of different types, but it can be acceptable at the stage of primary data processing.

Here it is important to mention the ***classification***, which is often called the system, whereas it is only linearly ordered by a group of homogeneous phenomena in accordance with some characteristic / characteristics. Both knowledge (facts and rules) and skills (processes and actions) (in terms of Pedagogy and Teaching methods) as parts of the VC system can be also classified, making up the knowledge and skills databases (database and knowledgebase in the terms of Cybernetics, respectively) of verbal-communicative activity (VCA), and being referred to as *communicative competence* (CC) in Psycholinguistics.

There are a lot of known and used nowadays methods for studying systems (see: S. Optner, C. Gane and T. Sarson, D. Cleland and W. King, F. I. Peregudov, F. P. Tarasenko, B. G. Yudin, S. A. Valuyev, V. A. Gubanov, V. V. Zakharov, A. N. Kovalenko, V. V. Kafarov, I. N. Dorokhov, A. I. Kupryukhin, Yu. A. Dzhagarov, G. I. Dubenchak, V. Ye. Dubenchak), but the major ones are represented by the system analysis and system modelling. It is obvious that only specialists of the relevant specific field of scientific knowledge can make a system analysis. However, verbal communication covers all the aspects of the communicant's personality, such as linguistic, psychological, cognitive, intellectual, psychophysical, and social ones as constituents of communication, being subjects of study of different sciences. And although much of the research in the above mentioned sciences deals with new areas of Linguistics (Psycholinguistics, Cognitive Science, Sociolinguistics, Pragmatics, Discourse Analysis, etc.), the primary sources must be inevitably taken into account. An extremely high level of knowledge in the areas of science, which are of interest to us, requires comprehending of the accumulated information through abstractions of the systematic methodology.

The components of the system constitute the following formula: S = [W, M, P, R, α, Str (Org), ier, E, G, B, I, C], where the system (S) is *an object separated from the environment and existing as a unity with the multitude of constituents, the complex interaction of which leads to the achievement of a certain goal*. The most significant feature of the system (S) is its integrity (W), expressed as emergence, meaning a fundamentally new property / characteristics of the unity, wherein the sum of the constituent properties is different from the integral unity existing until the unity itself exists. "It should be noted that the more the properties of the unity differ from the sum of the constituent properties, the higher the organization / ordering of the system is. W. Ashby, a cybernetist, demostrated that "**the higher the degree of agreement in the behaviour of a constituents system**", the more opportunities to choose behaviour the system has" (Zhivitskaya 2005: 78) (emphasis added – *A. Z.*).

The system includes the following constituents:

– elements (M), i.e. further non-divisible parts, the multiplicity of partitioning of which reveal the aspects of the system;
– properties (P) of elements, subsystems, into which the elements are combined;
– relationships (R) within the system and with other systems;
– communication (α) with other systems;
– structure (organization) Str (Org) of the system;
– (ier) hierarchical structure;
– interaction with the external environment (E) in terms of the matter, energy and information exchange;
– the objectives (G) of the system and its elements as an image of the desired state of the object and the efforts exerted by the system;
– behaviour (B), including the system development, i.e. change of the system itself or its parts determined by the objectives alteration;
– an information aspect (I) that combines databases and knowledge bases;
– management (C) of the system (Sadovskiy 1984).

As a result, VC can be defined as a goal-oriented process of (a) processing and transmitting, or (b) receiving and processing information presented in the verbal form.

***2. Prelinguocommunication Period.***

As it was already mentioned, the first model of VC is considered to be the model of Aristotle. "Speech consists of three elements: a **speaker** himself / herself, **a subject about which he / she speaks**, and **a person to whom he / she addresses**; it is the final goal of everything" (Aristotle 1978: 24) (emphasis added – *A. Z.*). In modern interpretation, this model looks as follows:

**SPEAKER** — **SPEECH** — **LISTENER**

This model includes (a) the main "participants" of the VC, (b) their inseparable integrity, (c) isolation from the environment, and (d) the order of "movement" of information from the SPEAKER to the LISTENER. Philologists still call this model the basic one, but for the unexperienced reader, as well as for the System theory, it is a model of the *"black box"*, or rather, of three equally connected *"black boxes"*, within which it is impossible to determine the structure and order of functioning of the system constituents in general, since for the whole modelled system neither the goal of its existence, nor the relationship with the environment, nor the nature of the relations between the constituents, nor much else are determined. You can only see the result of the "work" of the hidden ("black box") system. Therefore, strictly speaking, this model cannot be called a model of the VC system.

Ancient rhetoricians and philosophers in their works tried to present the detailed structural composition of the system which could correlate with the Aristotle's position of "SPEAKER", namely, with the VCA and the addresser's CC (in modern terminology).

Thus, the integrity of the speaker's VCA system is expressed in the emergent result (Σ), namely, the perlocutive effect demonstrated by the addressee ("LISTENER", according to Aristotle) under the influence of the perceived and processed written and / or oral speech. It is for the first time when the goal (G) of the addresser's VCA (SPEAKER'S) is defined, being determined by the Stoics as the finding of an objectified truth in a specific concrete problem (in dialectics, i.e. in the dialogue of the subjects), and by Sophists – as a victory in the favour of the speaker over the listener (in a specific concrete problem irrespective of morality, law, public good and other universal values, because even in the dispute the addressee was regarded as an object of persuasion). Achieving the goal is treated as *success*. The goal is achieved in the process of verbal communication, that the Stoics considered as a dialogue of subjects seeking for a correct and, eventually, mutually approved solution, by appealing to logic, bringing arguments and stimulating emotions, while the Sophists believed it to be the perfect technology of speech manipulation with the addressee's consciousness being an object (LISTENER). In either case, the addressee resolves the problem through the *persuasion* of the persons whom he addresses. It is claimed, for example, that the king of Macedonia, Philip (359 BC – 336 BC, the father of Alexander the Great), reacted to Demosthenes' speech against Philip's war ("the Philippics") as follows: "If I heard these speeches of Demosthenes, I would have voted for the war against myself" (Udalykh 2010: 21).

Elements (M) of SPEAKER's speeches are considered to be elements of (a) language related to morphology, syntax, and lexicology; (b) logical (*argumentation*) and compositional structure (*poetics*), the style of the text of *speech* in accordance with the speech genres (*advisory* – to convince or decline, *judicial* – to blame or justify, *epideictic* speeches – solemn speeches, *encomia* – laudatory speeches); (c) cognitive processing of textual information, i.e. the actions of *interpreting* the meaning of the linguistic sign (Aristotle, V. Z. Demyankov, Ye. A. Selivanova), (d) the activity on pronunciation of a speech, i.e. the technique of speech (Demosthenes). Description of the elements of the *speech* system characterizes both the properties (P) of the elements mentioned, as well as their grouping into subsystems. But the most known are the declared properties of *speech text*: *logos* (force of arguments), *ethos* (relevance in the situation and compliance with generally accepted customs and standpoints) and *pathos* (activation of emotions). Important are also the *clarity, conciseness, proportionality, elegance,* and *nobleness* of the style of *speech*.

Special attention was also paid to the subject area of *speech texts* of different genres, i.e. their connection (α) with knowledge systems in politics, economics, military affairs, international relations, and moral institutions, social area, etc.

The change into the behaviour (B) of the system was made by the Sophists. Having altered the target setting, they changed the whole logic and structure of the *speech text* as a *demagogic* system.

The elements of the Aristotle's three-constituent model, having undergone certain changes, appear in many other subsequent models of VC up to the twentieth century.

***3. Information-and-Code Models.***

In the middle of the twentieth century, they began studying the language sign in action being the basis for new trends development in Linguistics. And "by the 1970s and 1980s [...] "the formalizing reduction" of the language, and the ignoring of the human factor, had been perceived as too obvious coarsening" (Demyankov 1995: 48). Including into the determinants the origin and understanding of the forms and meanings of a wide range of extralinguistic conditions for the functioning of verbal communication, which naturally led to the search for a new type of system of relations between form, sense, meaning, and the conditions mentioned, was opposed, in the opinion of most modern linguists, to a taxonomic approach in Linguistics.

However, from our point of view, there was another transition to a qualitatively new level of research in the Philosophy of Language and Linguistics, implying not only a complication of the existing understanding of the language system, but also the inclusion of this system as a subsystem into a larger-scale construction of speech. And this evolution logically took place not as a counterbalance to structuralism, but due to the knowledgebase formed in Linguistics (Susov 1999), giving the opportunity to respond to the challenge of the new time, its new pragmatic and technocratic needs, having combined its efforts with the Philosophy of Language and Psychology.

Since late nineteenth century, in Linguistics, Philosophy, and Psychology there has emerged and begun to develop in parallel the opinion in accordance with which the language is considered as a tool of communication activity and a way of thinking. The idea of "the language as a system of psychological signs used to provide socially communicative, and pragmatically oriented human activity", initially formulated by I. A. Baudouin de Courtenay, was substantiated in America by Charles Pierce and William James, and in Switzerland – by Ferdinand de Saussure (Leshchak 1997: 40). "Any linguistic fact represents a relation; there is nothing in it but relation" (Saussure 1990: 197). According to Saussure, "The language […] is a grammatical system potentially existing in every brain or, better to say, in the brains of the group of individuals, for the language does not exist in any of them to the full, it exists to the full only in mass" (Saussure 1998: 19).

I. P. Pavlov, a physiologist, creates the theory of the first and second signal systems, explaining the influence of the language as the second signal system (SSS) on the first (FSS), a sensory one, and through it on the physiological, physical, emotional, and mental reactions of a man (Pavlovskiye Sredy 1949).

At the beginning of the twentieth century, in Philosophy, and Linguistics started to spread and grow the idea that senses, formed in the process of speech communication, were not equal to the sum of the meanings of language units, but were of extralinguistic and extra-speech character. There appeared different views and accordingly, the trends of studying the emergent results origin, with the linguists focusing their attention on the speech (Vygotskiy 1956; Glukhov, Kovshikov 2007). There also appeared various theories of verbal *communication*, as well as a new look of its model.

In 1948 G. Lasswell (Lasswell 1971), an American scholar, proposed an improved model, which looks as follows (cf. with an Aristotelian one).

| **SPEAKER** | **SPEECH** | **LISTENER** |
|---|---|---|
| **who?** | **reports what?** + **using which channel?** | **To whom?** |
| With what intention? | In what situation?<br>Having what resources?<br>Using which strategy? | Influencing what kind of audience?<br>With what effect? |

In such type of interpretation, first and foremost the author introduces the idea of managing (C) all the stages of communication based on the analysis of the context (situation, addressee) (E + α), the content of the message (I), the method of its transmission (P), and also the comparison with the received or the expected results (effect) (G). Moreover, the goal of the addresser became top priority, based on which the optimal text of the message, the channel (a mass media means) and the account of influence on different types of audience were selected.

In 1948, the book of Norbert Wiener, an American mathematician, "Cybernetics: or Control and Communication in the Man and the Animal" (Wiener 1983), was published, where the author presented the concept of feedback (E + B), which significantly influenced Psychology, Sociology, and Linguistics. According to S. Beer (1972) "Feedback is the return of a part of the output information to its input, which will then change. The positive feedback causes an increase in the signal level at the output, and therefore, at the input; the negative feedback with the output signal increase causes a signal decrease at the input, and, as a result, it is stabilizing in principle" (Beer 1993: 408).

The next addition to the model was made by C. E. Shannon and W. Weaver (Shannon & Weaver 1949). Reflecting on interference during communication, they came to the conclusion that "noise" can be not only physically felt, but also perceived in the form of redundant information (I). They determined and mathematically calculated the "optimal" amount of redundancy for the effectiveness of the input information:

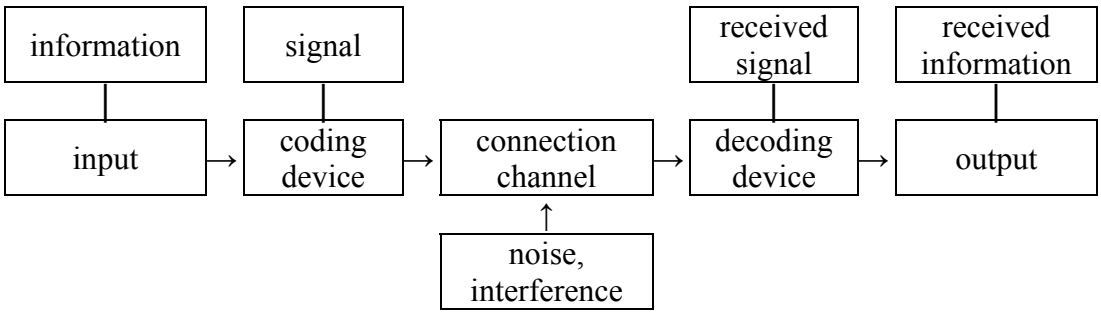


Describing various models of communication, G. G. Pocheptsov notes: "The standard communication model, recognized everywhere, consists of the following elements chain: source → coding → message → decoding → recipient" (Pocheptsov 2001: 24). Actually, the whole model is reduced to the well-known formula S → R, where S is a stimulus representing a combination of a set of codes of the second signalling system that causes a certain reaction-R. For this type of model M. L. Makarov gives the following explanation: "The code model can be shortly described as follows: the roles of participants – *the sender* and *the recipient*, *the message* contains information about the state of affairs or *"thought*" [...] of the speaker, which he intentionally transmits to the listener; they both have a code (a sign language system) that conventionally correlates sounds with meanings. This model is based on the primitive *intersubjectivity*: the goal of communication is a general thought or, more precisely, a message (*a shared message*); the process of achieving this goal is possible because of the existence of *a shared code*. Both of the above mentioned presuppose a greater role of collective experience: identical linguistic knowledge preceding communication (Makarov 2003: 35).

In 1960 R. O. Jacobson (Jacobson 1975) introduces into the VC model the concept of *context* (E) and *code* (M).

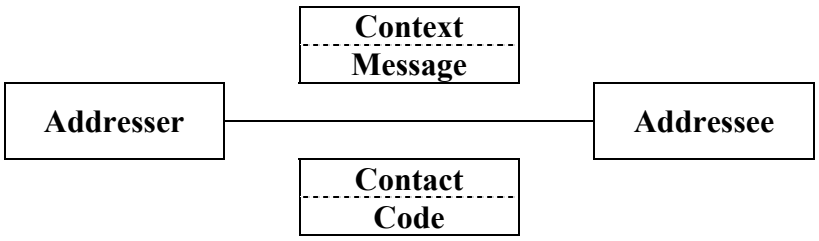

As for *the code model* of the VC, Yu. M. Lotman (criticizing R. Jacobson's model) suggests that in fact the speaker and the listener can possess neither the same knowledge, nor have the same notions of the world and the phenomena in it, and therefore never completely identical codes: "The language is the code plus its history" (Lotman 2000: 15). Otherwise, with the absolute coincidence of the codes' "history", there would be no need for communication. VC, according to Yu. M. Lotman, is a kind of "translation" of a text from the addresser's codes into the addressee's codes. "The very possibility of such a translation is due to the fact that the codes of both communication participants, though not identical, build overlapping varieties" (Lotman 2000: 563).

***4. Cognitive-and-Activity Models.***

In the thirties of the twentieth century in Psychology and Philosophy (in the aspect of the philosophy of language) there appeared scientific works, which initiated the study of the "black box" represented by "SPEECH". L. S. Vygotskiy, a psychologist, treating speech as a mental and social function of thinking, introduces the notion of *speech activity* (Vygotskiy 1956). L. Wittgenstein, a philosopher, as a result of reflections on the contact of the language with the inner world of a man and the external world of objects, comes to the conclusion that the "reference system" for understanding the language is neither the world of objects, nor the set of phenomena of the external world (the language functioning environment), but "a common behaviour of people" (Wittgenstein 1994: 164), which makes the use of language signs conventional, giving meaning to these signs and providing an opportunity for success / failure, similar to games (for example, chess or cards). A standard unit of speech (as a move in the game) is called by L. Wittgenstein "***the speech act***" (SA) (the term is introduced by J. L. Austin and J. R. Searle), the properties of which, but for the standardization of the linguistic system, social standards and conditions of the pragmatic situation, cover purposefulness and co-reference with the speaker's person. The theory of "language games" was neither clearly described, nor further developed, but played a big role in considering the forms of the language use in action (Susov 1999), and later it was reflected in discourse analysis (Makarov 2003).

***4.1. Cognitive-and-Semiotic Models of Speech Activity.***

Developing the theory of communication, G. G. Pocheptsov gives his idea of the VC as follows: "Communication will be understood by us as processes of recoding the verbal into the nonverbal and nonverbal into the verbal sphere" (Pocheptsov 1996: 16). In Pragmatics, the term "*nonverbal sphere*" refers to the perlocutive effect (Pocheptsov 1996); i.e. changes in the information state of a particular object (addressee), single or, more often, multiple, and, as a result, his behavior. Research presented in the scientific literature on the theory of communication, primarily deals with the investigation of the dependence of the desired or obtained perlocutive effect upon various aspects of the formation and transmission of information from the pragmatic point of view, recognizing an additional role of cognitive and speech activities for "transcoding".

"The performative (or actional) principle was introduced into the speech analysis by John Langshaw Austin and John Rogers Searle, the founders of the Philosophy of Language. They developed the so-called standard Theory of Speech Acts, quickly recognized by linguists" (Susov 2009: 34).

The model of the SA of J. L. Austin (1962) is described in three aspects, separated for methodological purposes into discrete acts, and the model of J. R. Searle (1965) – in four, which is presented in Table 1 (after (Susov 1999)).

**Table 1**

| ***Austin* (1962)** | | ***Searle* (1965)** | |
|---|---|---|---|
| Term | Term meaning | Term | Term meaning |
| **Locutionary Act** | | **Act of Production / Pronunciation** | |
| а) a phonetic act | realization of a sound structure | (locutions) | realization of a sound structure |
| б) a phatic act | realization of a lexical and grammatical structure | | |
| в) a retic act | realization of a semantic structure | | |
| | | A propositional act (proposition – *p*) | а) a logic form;<br>б) state of affairs in the world in past, present, or future |
| | | а) act of reference | reference to a person or an object |
| | | б) act of predication | reference to a token, which is in predication with a referent |
| Illocutionary act | a) reference to the meaning of the expressed proposition;<br>b) reference to a communicative goal of the utterance;<br>c) conventionality | Illocutionary act (illocution) F(*p*) | a) reference to the meaning of the expressed proposition;<br>b) reference to a communicative goal of the utterance;<br>c) conventionality |
| Perlocution-ary act | a) intended influence on the addressee;<br>b) conventionality | Perlocutionary act (perlocution) | a) intended influence on the addressee;<br>b) conventionality |

The first result of this model demonstrating "the language in use" and action was presented in the form of the list of propositions in which (a) the illocutionary and perlocutive forces coincide due to (b) the presence of performative verbs (for example, *I order, I congratulate, I swear*, etc.) and / or (c) logical form (*Will you go to the meeting? What kind of sportsman is he?* IC[1]-6; *What kind of sportsman he is!* IC-7). And the performatives themselves are already actions.

However, the model of SA implies, but does not include, those many factors (and variants of combinations of these factors), situations and personalities of communicants, that finally form the perlocutive force of the SA and produce one or another perlocutive effect. These issues are considered within the framework of the theory of pragmatic meaning. This theory "is, according to J. Leach, following here J. L. Austin and J. R. Searle, part of ***the Theory of Activity***; meaning is defined in terms of describing what the speakers as the creators of speech acts produce in relation to the listeners" (Susov 2009: 49) (emphasis added – *A. Z.*).

To the activity models of the VC, considered in the theory of communicative interaction (Linguopragmatics) and in Discourse analysis, it is possible to attribute the interference and interactive cognitive models of VC (Makarov 2003).

The inspirer of one of such models, namely an inferential model, was Herbert Paul Grice (Grice 1967), a linguist and a philosopher who, according to I. P. Susov, "showed that the use of language and the interpretation of linguistic forms are carried out in accordance with certain rules and principles of communication; formulated the postulates (maxims) of the widely known Principle of Cooperation and demonstrated the possibilities of a semantic interpretation of utterances in terms of colloquial (conversational, communicative) implicatures" (Susov 2009: 34).

"The process of communication is initiated not by a person's desire to convey "thought" or *information*, but his desire to make his *intentions* understandable to others. Speech means for

[1] IC – Intonational construction.

expressing intentions are *utterances*. Their content is not limited (unlike the code model) by representative messages on the state of affairs, they can express, emotions, for instance. Intentions themselves are not propositional at all, they approximate by their nature to settings or motives. But the content of the utterances or the *message* is propositional. Intentions determine how this propositional content should be understood. The code model has taken roots in scientific and everyday consciousness. The interference model appeared not so long ago, but it is adequately perceived at the level of "common sense"" (Makarov 2003: 22).

One version of the interference model is the interpretation of all codes as a set of conventions common to the addresser and recipient. Participants in communication **decode a message** based on the knowledge of conventions, signal and context. Obviously, encoding / decoding and inference are different, complementary processes, but, taken separately, they cannot explain the phenomenon of verbal communication.

The third model is *the interactive model* of communication, the basic feature of which is the interaction of communicants in the socio-cultural situations. It is the communicatively conditioned social practice that explains the formation and transformation of meanings in communication. "Communication does not occur as *a translation of information* and *the manifestation of intention*, but as ***a demonstration of meanings***, not necessarily intended for recognition and interpretation by the recipient" (Makarov 2003: 38). The communication considered within the framework of this model, like any form of behavior: action, inaction, speech, silence (for *silence* see: Bogdanov 1986 Krestinskiy 1989, 1990; Tannen, Saville-Troike 1985; Jaworski 1993) – under certain conditions may become communicatively meaningful. Moreover, taking into account all the "demonstrations", the recipient can **deduce the meanings not laid down by the author of the speech**, as is often encountered in life. According to E. Goffman (Makarov 2003), during communication two types of information are reported: implicit (*information given*), and explicit (*information given-off*). If the primary information is formed by the addresser (selection of meanings, formalization / coding, presentation in accordance with their intentions), then the volume and quality of secondary information (as a secondary text) is formed by the addressee on the basis of information extracted from the received text and depending on a number of intellectual, moral and psychological qualities, as well as the ability to interpret. Thus, the results of *interpretation* become a measure of the success of communication for both the addresser and the addressee. Accounting for non-verbal aspects of communication, and using the socio-cultural context requires extensive ***"background knowledge"*** (**presuppositions or presuppositional knowledge**) (Makarov 2003: 136), conventional by their nature but not algorithmizable in the same way as language codes.

One of the variants of describing ***"background knowledge"*** involved in the interpretation of the text is the list ("questionnaire") of genre-forming characteristics compiled by T. V. Shmeleva: "a communicative goal; the image of the author; the image of the addressee; dictum; the factor of the past; the factor of the future; the formal organization (later – the language embodiment)" (Shmeleva 1990: 122). The author notes that "the language system, the building of which was so enthusiastically studied by Linguistics during all the twentieth century, is genre-neutral; the speech can be realized only in genres, and outside genres it cannot be understood and studied even on the first review (Shmeleva 1990: 121).

***4.2. Performative Models.***

For the Theory of Communication both the code-information and semiotic, and the psychological and cognitive aspects of verbal communication are equally relevant. However, the psychological processes of speech production and reception were developed thoroughly and consistently no sooner than by the Soviet psycholinguistic school within the framework of the *Theory of Speech Activity* (see: A. N. Leontyev, A. A. Leontyev, Ye. F. Tarasov, N. I. Zhynkin, I. A. Zimnyaya, V. P. Zinchenko, A. S. Asmolov and others).

Speech activity means "an active, focused, motivated, objective (informative) process of production and / or reception of a thought (an expression of intention, feelings) formed and

verbalized by the means of a language, and aimed at person's communicative and cognitive need gratification in the process of communication" (Zinmyaya 2001: 511).

When studying **the productive language activities models**, a speaking model in particular, Ye. S. Kubyakova (Kubyakova 1991) combines them (models) into linguistic, psycholinguistic and procedural groups. While the speech production linguistic models aim at interpreting the role of linguistic phenomena, units, categories, etc. in speech activity, the procedural models appear "in the context of machine programs or programming methods creation" (Winograd 1983: 124). They are closely related to the Cognitive Science, within which many traditional ideas of Psychology and Linguistics are being reconsidered (see e.g. (Wilensky 1994)), and focused on cognitive processes study, as well as ways of obtaining, storing and using of knowledge structures. Nevertheless, their separation from the psycholinguistic and linguistic models is rather relative, since the latter aim at the detailed description of the specific conditions and characteristics of the speech production processes. At the same time the psycholinguistic models definitely reflect the nature of mental processes in verbal and mental activity, the structure of this activity. It is obvious that due to differences in the presuppositional attitude of modeling, different aspects of speech activity are interpreted in the mentioned patters, and the results of the analysis are represented in different term and concept systems. However, such a differentiation, which is fully justified for more complete and adequate understanding of the object properties, resulted in a lack of description of the full speech production cycle – from intention to realization– with the single approach. Furthermore, due to the exceptional complexity of such description, all attempts to describe the structure and specificity of the speech production process completely are currently, for obvious reasons, only preliminary (Kubyakova 1991).

I. A. Zimnyaya gives the following brief description of the productive language activities models, offered by the national scientists (Table 2) (Zimnyaya 1985).

**Table 2**

| **Author of the model** | **Stages** | | | | | |
|---|---|---|---|---|---|---|
| | **I** | **II** | **III** | **IV** | **V** | **VI** |
| L.S. Vygotskiy [1934] | motive | thought | internal word (sense) | external word meaning | — | word |
| A.A. Leontyev, T.V. Ryabova [1970] | motive | thought | internal programming | lexical development, grammar constructing | — | external speech |
| T.V. Akhutina [I975] | motive | thought (speech intention) | internal programming | meaning structure, grammar structure | kinetic program | external speech |
| A.R. Luriya [1975] | motive | utterance basic idea | semantic note | remote syntactic structures | surface syntactic structures | development; morphological, phonological |
| S.D. Katsnelson [1972] | motive | quantization of mental elements into propositions | deep semantic, syntactic structuring | choice of lexical units, grammatical forrms | pronunciation models | phonatory performance |

Both the mentioned examples and the language activities models developed abroad have a layered, a cyclic or an integrative structure (the levels of production and process phases or stages are specified) (after (Kubyakova 1991)).

In psycholinguistic and linguodidactic literature **the receptive language activities** are analyzed by Miller, 1956; Devine, 1968, 1976; Riwers, 1971; Byrne, 1976; Isenina, 1967; Ilyina, 1970, 1979; Yesiutina & Lapidus, 1972; Saburova, 1973; Yelukhina & Musnitskaya, 1978; Iliina & Klychnikova, 1979; Nemanova, 1981; Shachter, 1981; Gez, 1989; Bartoshevich, 1991; Kuznetsov, 1991; Aleksieieva, 1983; Dekhert, 1984; Zimnyaya, 1985, 1987, 1989; Orlov, 1988; Kolpakova, 1991; Borisova, 1995 and others.

Despite a number of differences of the models developed by the mentioned researchers, the phase structural organization of receptive language activities is generally accepted.

1. The phase of perception of external verbal information:
   - 1.1) optical or acoustic perception of the second signal system signs;
   - 1.2) discrimination and recognition processes as analytical and synthetic processing of optical / acoustic signal, clustering and template matching.
2. The phase of semantic information processing comes if a recipient has sufficient linguistic knowledge of a particular language and presuppositional knowledge, enabling them to understand the text / discourse traditionally:
   - 2.1) text compression:
     - 2.1.1)dividing the text into the parts by its "semantic grouping";
     - 2.1.2)selection of "semantic reference points" like word combinations, words, parts of the words, bearing the generalized, synthesized meaning of particular parts of the text;
   - 2.2) replacement of the incoming second signal system signs with cognitive images and their associative links ("equivalent replacement") enabling to consolidate the information received and the information held in mind, and hence to keep it (Smirnov 2005; Zhynkin 1982).

Alongside with the unfolding reception procedure, the probabilistic forecasting of the form and meaning can happen on phonological, lexical, propositional, discourse levels.

Under the decompression of the information through the links appeared in mind on consolidation, some extra link-associated implicit information is often recollected.

In general, the main elements of all productive and receptive language activities models can be structured as follows (see Table 3) (after [Leontyev 1969]).

**Table 3**

| **Productive language activities – speaking and writing** | **Receptive language activities – reading and comprehension** |
|---|---|
| – language activities goal actualization; | – language activities goal actualization; |
| – selection and realization of language activities program (strategies and tactics); | – selection and realization of text semantic database extraction program (strategies and tactics); |
| – choice of signs and their combinations with all types of essential meanings; | – psychophysical perception mechanisms (visual, auditory); |
| – organization (according to linguistic and extra-linguistic rules) of all types of meanings into a speech act in order to derive the necessary sense; | – mechanisms of identification of signs bearing semantics, text semantic database extraction; |
| – mechanical and physiological actions ensuring the speech act materialization (physical process of ‘speaking’ or ‘writing’). | – interpretation of text semantic database. |

Table 3 in general and some its positions in particular require some comments.

1. In every speech activity model at preverbal stages “motivation” which is interpreted as a need, and as a motive, and as a goal at the same time (‘need-motivation-goal’ level after

I. A. Zimnyaya, V. P. Glukhov) is seen as a separate phase. However, according to the motivation theories studies, the needs are just basis for one or another type of activities (Leontyev 1971). In this case, speech activity can activate only the need for the speech process itself. If the need that does not relate to the speech activity directly arises and can be satisfied verbally, the motive of speech activity is formed (Leontyev 1971; Hekhausen 1986).

Therefore, the speech activity motive and goal match only if the speech act is equal to one isosemic isomorphic proposition declaring the motive content directly. This idea can be illustrated with the phrase *"Please, open the door"* in the situation when you need to leave the room, you keep a pile of books in hand, the door opens inwards, and those present are busy with their own affairs and ignore your problems. Under different conditions, the speech activity motive and goal match for one reason only: there are several goals within the framework of one motive. For example, in the situation when a group of people is in the room, and the window has been opened on a cold day for a long time, and the one who is closer to the window says the phrase *"It became cold"*. The need for a person in this situation is to warm up, the motive for the phrase is to draw attention of the people to the individual problem, the goal is to get the approval of the people to take off the source of cold or another problem-solving proposal, the form is a polite, non-personalized request to help solve the problem. The same can be applied to the receptive language activities. For example, the passengers read detective stories and popular magazines on a train because they have a need to take their nervous system off stressful waiting on the end of the ride. The motive for choosing reading is its preference to other kinds of pastime available in the circumstances. The goal is to enjoy either the new information or following the intricate storyline without the thinking processes straining.

Furthermore, the need, the motive and the goal are not one-time phenomena. The motive in the verbal method of satisfaction of needs can appear after all other methods have been tried. The goal or even a group of subgoals can appear only as a result of passing the stage of afferent synthesis of all the components of the situation, including the motives and the ways of the activities.

2. In all models of speech activity the stage of selection and realization of the speech activity program is mentioned. The analysis of the scientific literature on this subject demonstrates that this program is usually reduced to the form-semantic associative choice and transformations at the word or propositional level. And the strategies and tactics declared are not offered as they are the organizational forms of the higher level than speech activity, i.e. of the verbal communication level. This is well illustrated on the proposed productive language activities models also.

The similarity in understanding of the first three, i.e. preverbal, stages is obvious. The discrepancy in understanding of the stage following immediately before verbalization indicates the partitioned understanding of preverbal cognitive stages of productive speech. However, despite the general acceptance of the problem, the changeovers from internal to external speech have not received the detailed description yet. For example, beginning with the fourth stage, the level model of productive speech with undifferentiated representation of lexical development and grammar structuring dominate in the models of the majority of authors, and the model by A. R. Luriya contains the scheme typical of generativism – from deep to surface syntax.

***5. Verbal-Communicative Activity System.***

At first view of the abstracted structure of the system (S), the components of verbal communication are seen clearly in every section (see (Goykhman 1997; Batsevich 2004; Selivanova 2011)). The members (M) include phonetic and phonological units, words, sentences, text (as locutionary capacity of verbal communication) and speech acts. On the one hand, these members are the systems themselves (it must be noted that phonetic and phonological units are the basis for the norm of pronunciation), and on the other hand, they are combined into formal / form-semantic (word, sentence) and semiotic systems (for example, speech act and discourse) which can be qualified as subsystems (subS) within the general verbal communication. Other obvious subsystems (subS) of the general verbal communication system (S) include language

activities (writing, speaking, reading, comprehension) and cognitive activities (verbal communication program building – strategies, tactics; selection of devices and form-semantic means, etc.) with all their specific elements.

Relations (R) with other systems (let us call them *R-external*) are obvious. Examples can be found in studies on Social Linguistics and Cultural linguistics (for example, the standard language and the ritual speech) (Maslova 2001; Olianich 2004). Another system external to verbal communication is memory, from which the knowledge stored in the process of verbal communication (as frames, scripts, verbal chains, facts, rules, etc.) is extracted. Knowledge (facts and rules) as information consolidated in memory (in cybernetic terms – *a database*) is a part of the experience (informational aspect – I) (Hergenhahn, Olson 2004). Another part of the experience is the ability to extract knowledge (facts and rules) from *the database* and use it. In Cybernetics the complex of these skills is called *the knowledge database*.

In addition to receiving the material signs (oral or written texts), information and / or incentives for verbal-communicative or other activities, the addressee also transmit the material signs (oral or written texts), information and / or incentives with the productive verbal-communicative activities with a goal (G) to influence the consciousness of the addressee and receive a perlocutive verbal-communicative and / or other result planned.

But the obvious relations (R) inside the verbal communication system (let us call them *R-internal*) are not well understood yet. V. B. Kasevich summarizes the search of the internal connections of the verbal communication elements by linguists as follows: "The question arises: what is the correlation between General Theory of Communication […] and Linguistics as the theory of language?" And as a result of the discussions on the content of the phenomena and concepts of *communication, language system* and *speech activity* linking them, the researcher comes to the conclusion that "probably the most **appropriate approach** to finding the correlation of two spheres and thereafter of two theories will be the **functional approach** […]" (Kasevich 2001: 73) (emphasis added – *A. Z.*). Further the author emphasizes the procedural aspect of this concept: "[…] on the basis reasoning from the functions, the theory of language – Linguistics – deals with the language *means*, the process of their using and the product of this process, and the theory of communication – *the goal* of language and non-language means using as well as *the result* achieved with the appropriate processes" (Kasevich 2001: 73).

Citing reflections of V. B. Kasevich, we place focus on the aspect of the concept *'functional'*, highlighted by the author, not without reason[1]. This concept is derived from the term *'function'* (from the Lat. functio – execution, performance), used in several meanings[2].

---

1 *Functional* means **(1)** "*adj*. to *function*: "*functional relation, functional dependence*"; **(2)** "belonging to functions of smth., explained by functioning of smth., related to activity, but not to structure / design of smth., not to the general properties of smth.: *functional disorder* (opposed to organic; med.), *functional heard disorder* (without anatomical changes in the heart): *functional value of money*" (after (Ushakov 1978: 139; Ozhehov 1987: 146).

2 "(philos.), relations of two (a group of) objects, in which a change in one of them leads to a change in the other. F. can be considered in regards to the effects (positive, negative – dysfunctional or neutral – afunctional), caused by the change of one parameter in another parameters of the object (functionality) or the interrelations of separate parts within a certain whole (functioning)" (Great Soviet Encyclopedia 1978: 138); (from the Lat. functio – execution, performance).

(sociol.), "1) the role that a particular social institution or a particular social process takes in regard to public demands, a system of a higher level of organization or the interests of its classes, social groups and individuals (e.g., F. of a state, a family, the arts, etc. relating to society); 2) dependence observed between different components of a single social process when changes in one part of the system are derived from changes in its another part (e.g., changes in urban / rural population ratio as the industry development function)" (Great Soviet Encyclopedia 1978: 138);

(math.), "expressing the dependence of some variables on other variables. If $x$ and $y$ are related so that a certain value of $y$ corresponds to each value of $x$, then $y$ is called an $x$ (single-valued) inner function. Sometimes $x$ is called an independent, and $y$ – a dependent variable. Such relation between $x$ and $y$ may be expressed as follows: $y = f(x)$vum $y = F(x)$ etc." (Great Soviet Encyclopedia 1978: 138);

If we extrapolate the mentioned meanings to the elements of the verbal communication system, we may note that, firstly, from the beginning to the end of verbal communication – it is a series of dependences both in the form of variables and in the form of relations. In particular, verbal communication begins and exists (*function* 1) only when a need of it emerged and did not end (*function* 4); and the verbal communication means (for example, a word, a sentence, or a speech act) are the variables (*function* 3) dependent on the external conditions (see the components of the speech genre model after T. V. Shmeliova) and the communicant's goals. If one / several external / internal factors (including the system's goals) change, the means change (*function* 4), which is considered as behaviour and development (B) in the system theory. And, secondly, verbal communication is procedural as it is realized by the speech and cognitive activities (*function* 2).

So, we cannot talk only about verbal communication, we can talk about verbal communication as an activity, i.e. the verbal-communicative activity. We must also admit that the verbal-communicative activity is functional in every sense of this concept.

The verbal and verbal-communicative models discussed above can be qualified as the elements of the structure (organization) (Str (Org)). However, like any rational system, the verbal-communicative activity has its own organizational structure. The goal of the verbal-communicative activity has always been considered through the prism of success/failure, i.e. the degree of congruence of perlocutionary effect of the speech act and the addresser's goal. The ancient philosophers, as is sown above, believed that success depended on elocution, expressiveness, composition, argumentativeness, deep knowledge of the subject, and the audience as a speech receiver. All these positions remain relevant today, but the content and understanding of the mentioned positions have changes, new positions and interpretations have been added.

For example, the situation in today's society has determined changes not only in the significance of the communicants' positions – an addressee and an addresser, but also has corrected their goals of verbal communication, hence all components of verbal-communicative activity. The language activities (receptive or productive) or demonstration / interpretation of senses performed by the addressee and the addresser, become tools for achieving the goal – perlocutionary reaction, the price (both literally or figuratively) of correctness / incorrectness of which is rather high for both participants of the communication. In **such interaction verbal communication is being built according to the strategic principle** in social (including family), as well as public (including political), and every day (including marketing), and any other types of verbal communication. The changes in the verbal-communicative activity structure based on the shift of emphasis in verbal communication cannot be correlated in this article due to the preliminary character of the analysis. Moreover, it stems from the lack of shared understanding of strategic organization of verbal communication in linguistic studies (see: Ye. S. Issers; T. Ye. Yanko; Z. Dörnyei, M. Scott; C. Færch G. Kasper; E. Kellerman; J. C. Richards; R. Schmidt; E. Bialystok; R. A. Clark, J. A. Daly; J. M. Wiemann; E. Kellerman, T. Paribakht, N. Poulisse and others). However, it can be said with confidence that for successful verbal communication the requirements for the content of the skills and knowledge database – communicative competence – change.

The verbal communication system is controlled (C) through the external and internal feedback (see: V. A. Kovshykov, V. P. Glukhov; L. L. Vvedenskaya; L. T. Pavlova, Ye. Yu. Kashayeva and others), thereby enabling the adaptive verbal-communicative behaviour.

***6. Conclusions.***

Summarizing the above, it can be said that (a) verbal communication exists only in the process of verbal-communicative activity; (b) verbal-communicative activity begins and is

(ling.), "the ability of the language form to serve one or another purpose (often a synonym for the terms 'meaning' and 'purpose' of the language form); dependence or relations between the language units, found at all levels of its system" (Great Soviet Encyclopedia 1978: 139).

realized for achieving a certain goal which, in turn, is a system-forming factor combining cognition, mentality, experience (knowledge and skills) and a language (as a signal system); (c) verbal-communicative activity is a functional system controlled through the external and internal feedback.

Verbal-communicative activity is multidimentional, therefore its linear representation and study are insufficient. Therefore, the above-mentioned definitions, the formula and the components of the system structure convey little of the system type, its inner structure and functioning. Only system modeling will allow to analyze, to identify the essential factors of the object studied as a process, a result, a system with its components, and to set the parameters for system control. The construction of such a model which will demonstrate not only the interdependent relationships and mechanisms of cognition, mentality, experience (skills and knowledge) and a language (the second signal system); further research in Philosophy of Language / Communication and Linguistics, but also will allow to prove a number of abstract and applied theories of Linguistics and Linguodidactics, will show the lines of further research.

***References***


Aristotle (2016). Ritorika [Rhetoric]. *Ancient rhetoric*. Moscow: Moskovskiy universitet. 15–164.

Austin, J. L. (1986). Word as action. *New in foreign linguistics*. Moscow: Progress. 17. 22–130.

Bacevych, F. S. (2004). *Osnovy komunikatyvnoyi linhvistyky* [Foundations of communicative linguistics]. Kyiv: Vydavnychyj centr “Akademija”. 342.

Beer, S. (1993). *Brain of the Firm*. Moscow: Radio i sviaz. 54–56.

Demyankov, V. Z. (1995). Dominiruyushchiye lingvisticheskiye teorii v kontse XX veka [Dominant linguistic theories at the end of the XX century]. *Language and science of the late 20th century*. Moscow: Institut yazykoznaniya RAN. 239–320

Glukhov, V. P., Kovshikov, V. A. (2007). *Psikholingvistika. Teoriya rechevoy deyatel'nosti* [Psycholinguistics. Theory of Speech Activity].. Moscow: Astrel. Tver: AST. 224.

Goykhman, O. Ya., & Nadeina, T. M. (1997). *Osnovy rechevoy kommunikatsii* [Foundations of speech communication]. Moscow: INFRA-M. 272.

*Bol'shaya sovetskaya entsiklopediya: v 30 t.* [Great Soviet Encyclopedia: in 30 vol.]. (1973). Moscow : Sovetskaya encyclopedia. Vol. 28.

Hekhausen, H. (1986). *Motivatsiya i deyatel'nost'* [Motivation and activity]. Moscow: Pedagogika. 860.

Hergenhahn, B., & Olson, M. H. (2004). Teorii nauchenia [Theories of Learning. St. Petersburg: Piter. 474.

Jacobson, R. (1975). Lingvistika i poetika [Linguistics and poetics]. *Structuralism: "for" and "against": collection of articles*. Moscow: Progress. 193–230.

Kasevich, V. B. (2001). Teoriya kommunikatsii i teoriya yazyka [Theory of Communication and Theory of Language]. *Speaker and Listener: Language Personality, Text, Learning Problems: Proceedings of the International Scientific and Methodological Conference (St. Petersburg, 26–28 February 2001)*. St. Petersburg: Soyuz. Retrieved from http://www.russcomm.ru/rca_biblio/k/kasevich.doc

Kubryakova, Ye. S., Shakhnarovich, A. M., Sakharny, L. V. (1991). *Chelovecheskiy faktor v yazyke: Yazyk i porozhdeniye rechi* [The human factor in the language: Language and the generation of speech]. Moscow: Nauka. 240.

Lasswell, H. (1948). The Structure and Function of Communications in Society. *The Communication of Ideas*. Lyman Bryson. New York: Harper and Brothers. 37–51.

Leshchak, O. V. (1997). Metodologicheskiye osnovy funktsional'nogo issledovaniya yazykovoy deyatel'nosti (na materiale slavyanskikh yazykov) [Methodological bases of functional research of language activity (on the material of Slavic languages)]. Ternopol: TGPI. 641.

Leontyev, A. A. (1969). *Yazyk, rech', rechevaya deyatel'nost'* [Language, speech, speech activity]. Moscow: Prosveshcheniye. 214

Leontyev, A. A. (1971). *Potrebnosti, motivy, emotsii* [Needs, motives, emotions]. Moscow: MGU. 40.

Lotman, Yu. M. (2000). Semiosfera [Semiosphere]. St. Petersburg: Iskusstvo -SPB. 704.

Luriya, A. R. (1979). *Yazyk i Soznaniye* [Language and Consciousness].. Moscow: Moskovskiy universitet. 320.

Makarov, M. L. (2003). *Osnovy teorii diskurs* [Foundations of Discourse]. Moscow: Gnosis. 280.

Marca, D. A., McGowan, C. L. (1993). *Metodologiya strukturnogo analiza i proyektirovaniya SADT* [Methodology of structural analysis and design of SADT]. Moscow: MetaTekhnologiya. 204.

Maslova, V. A. (2001). *Lingvokulturologiya* [Linguistics and Cultural Studies]. Moscow: Academiya. 208.

Olyanich, A. V. (2004). *Prezentatsionnaya teoriya diskursa* [Presentation theory of discourse. Volgograd: Paradigma. 507.

Ozhegov, S. I. (1987). *Slovar' russkogo yazyka: 57 000 slov* [Russian language Dictionary: 57,000 words]. Moscow: Russkiy yazyk. 707.

Pavlovskie Sredy. (1948) *Pavlovskiye sredy. Protokoly i stenogrammy fiziologicheskikh besed* [Pavlov's Wednesdays: Protocols and transcripts of physiological conversations]. Moscow, Leningrad: AN SSSR. Vol. 3. 318.

Pocheptsov, O. G. (1986). *Osnovy pragmaticheskogo opisaniya predlozheniya* [Basics of the sentence pragmatic description]. Kiev: Vyshcha shkola. 116.

Pocheptsov, G. G. (2001). *Teoriya kommunikatsii* [Theory of Communication]. Moscow: Refl-book. Kiev : Wackler. 656.

Searle, R. J. (1969). *Speech Acts: An Essay in the Philosophy of Language*. London: Cambridge University Press. Retrieved from https://doi.org/10.1017/CBO9781139173438

Sadovskiy, V. N. (1984). Problemy filosofskogo obosnovaniya sistemnykh issledovaniy [Problems of the philosophical substantiation of systemic research]. *System Research*: *Methodological Problems*. Moscow: Institut sistemnogo analiza RAN. 32–51.

Saussure, F. de (1990). *Zametki po obshchey lingvistike* [Notes on general linguistics]. Moscow : Progress. 280.

Saussure, F. de (1998). *Kurs obshchey lingvistiki* [Course of General Linguistics]. Moscow: Logos. 273.

Selivanova, O. O. (2011). *Osnovy teoriyi movnoyi komunikatsiyi* [Foundations of the linguistic communication theory]. Cherkasy: Chabanenko Ju. A. 350.

Shannon, C. E., Weaver, W. (1949). *The Mathematical Theory of Communication*. Urbana, IL: The University of Illinois Press, 1964. 1–117.

Shmeleva, T. V. (1990). Rechevoy zhanr. Vozmozhnosti opisaniya i ispol'zovaniya v prepodavanii yazyka [Speech genre. Possibilities of description and use in language teaching]. *Russistik Russistics. Scientific journal of the actual problems of teaching Russian*. Berlin. 2, 20–32.

Smirnov, V. M., Yakovlev, V. N., Pravdivtsev, V. A. (2005). *Fiziologiya tsentral'noy nervnoy sistemy* [Physiology of the central nervous system]. Moscow: Academiya. 352.

Susov, I. P. (1999). *Istoriya yazykoznaniya* [History of linguistics]. Tver: Tverskoy gosudarstvennyy universitet. 276.

Susov, I. P. (2009). *Lingvisticheskaya pragmatika* [Linguistic Pragmatics]. Vinnitsa: Nova knyha. 200.

Udalykh, G. D. (2010). *Ritorika. Chast' 1. Istoriya ritoriki* [Rhetoric. Part 1. History of rhetoric]. Baku: Mutardzhym. 220.

Ushakov D. N. (2007). *Bol'shoy tolkovyy slovar' sovremennogo russkogo yazyka* [A large explanatory dictionary of the modern Russian language]. Moscow: "Alta-Print". 800.

Vygotskiy, L. S. (1956). *Izbrannyye psikhologicheskiye issledovaniya* [Selected psychological research]. Moscow: APN RSFSR. 517.

Wiener, N. (1983) *Kibernetika, ili upravleniye i svyaz' v zhivotnom i mashine* [Cybernetics or control and communication in the animal and the machine]. Moscow: Nauka. 338.

Wilensky, R. (1994). Discourse, probability, and inference. *Beliefs, reasoning, and decision making: psycho-logic. In honor of Bob Abelson*. eds R. Schank and E. Langer. Hillsdale, NJ: Lawrence Erlbaum Associates. 363–387.

Winograd, T. A. (1983). K protsessual'nomu ponimaniyu semantiki [Towards a procedural understanding of semantics]. *New in foreign linguistics.* Moscow: Raduga, 12. 123–170.

Vitgenshteyn, L. (1994). Logiko-filosofskiy traktat [Tractatus Logico-Philosophicus]. *Philosophical works*. Moscow: Gnosis. Part I. 612.

Zhivitskaya, E. N., Edemskaya, O. P. (2005). *Sistemnyy analiz i proyektirovaniye informatsionnykh sistem: uchebno-metod. posobiye dlya studentov spetsial'nosti Í-40 01 02-02 "Inform. sistemy i tekhnologii v ekonomike"* [System analysis and design of information systems: a teaching aid for students of specialty I-400102-02 "Information systems and technologies in economics"]. Minsk: BSUIR. Retrieved from https://studfiles.net/preview/833143/

Zhinkin, N. I. (1982). *Rech' kak provodnik informatsii* [Speech as a conductor of information]. Moscow: Nauka. 156.

Zimnyaya, I. A. (1985). *Psikhologicheskiye aspekty prepodavaniya rechi na inostrannom yazyke* [Psychological Aspects of Teaching Speaking in a Foreign Language]. Moscow : Prosveshcheniye. 160.

Zimnyaya, I. A. (2001). Lingvopsikhologiya rechevoy deyatel'nosti [Linguopsychology of speech activity]. Moscow : Moskovskiy psikhologo-sotsial'nyy institut. Voronezh: NPO “MODEK”. 432.

**Бібліографічний опис:**

Зернецька, А. А. (2018). Синергетика вербально-комунікативної діяльності: філософія розбудови системи в діахронії. *Науковий часопис Національного педагогічного університету імені М. П. Драгоманова. Серія 9 Сучасні тенденції розвитку мов*. К. Вип. 17. С. 148–164. DOI: https://doi.org/10.31392/NPU-nc.series9.2018.17.11

***Анотація***

*Першу відому науці модель вербальної комунікації було запропоновано ще Аристотелем, але активно цей напрям почав розвиватися лише у XX столітті. Протягом вивчення мови як форми реалізації ВК дослідники будували нові й уточнювали вже відомі моделі: інформаційно-кодові, семіотичні, перформативні, мовні та ін., – доповнюючи загальну картину, але так і не пояснили зв'язок усіх елементів ВК як єдиної системи, що породжує емерджентний результат, і не врахували всього складу елементів ВК, який включає свідомість, мислення і досвід (знання і вміння). Однак кількість накопиченого наукового знання через відокремленість і локальність досліджень не дає відповіді на основні питання філософії мови, лінгвістики і психології щодо розуміння зв’язку свідомості, мислення, досвіду (знання і вміння) і мови (як другої сигнальної системи). Вербально комунікативна діяльність – поліаспектна і багатовимірна, а це означає, що представлення і дослідження її в лінійному вигляді недостатньо. Запропонований у статті розгляд відомих науці моделей і звернення до системного аналізу складових ВК (лінгвістичні (мовні), психологічні, когнітивні, інтелектуальні, психофізичні і соціальні аспекти особистості комуніканта) дає підстави для розробки синергетичної моделі ВК як функціональної системи, яка б показала взаємозумовлений зв'язок свідомості, мислення, досвіду (знань і умінь) і мови (другої сигнальної системи).*

***Ключові слова:*** *філософія мови, вербальна комунікація, моделі вербальної комунікації, система вербальної комунікації, мова і свідомість, мова і мислення, мова і досвід (знання і вміння).*

# CONTENTS

*Nadiya V. Borodiichuk*
Cognitive Mechanism of Analogy and its Role in Processes of Primary Metaphor Creation ..... 5

*Olesya O. Cherkhava*
Hyperconcept CONVERT TO CHRISTIANITY Reconstruction in English, German and Ukrainian Texts of Religious Popular Discourse ..... 19

*Oleh V. Demenchuk*
Lexical Semantic Modelling in Cross-Linguistic Perspective ..... 32

*Natalia B. Ivanytska, Nina L. Ivanytska*
Syntagmatic Dimension of Ukrainian and English Verbs: the Typology of Exponents of Correlation. ..... 43

*Ganna V. Izyumtseva*
Theoconcept Structure Reconstruction as Multi-Dimensional Matrix Formation ..... 57

*Yan V. Kapranov*
Diachronic Interpretation of Nostratic Etymon *wol[a] Based on Proto-Indo-European *(e)wel- (Gr hw- / ew-) and Proto-Altaic *ulu (~ -o) Forms (According to S. A. Starostin's Version) ..... 68

*Olena M. Kolomiiets*
Figurative and Stylistic Elements Reconstruction of Newspaper Synoptic Texts (Based on the English, German, Polish and Ukrainian Languages) ..... 81

*Alla V. Korolyova*
Combinatorial Syntagmatics: from the Theory of Valency to the Theory of Conceptual Integration ..... 99

*Nataliya Ye. Lemish*
Intralingual Prototypical Features of Causal Dominants in Related Languages ..... 112

*Luibov V. Shnurovska*
Dynamics of Semantic and Pragmatic Framework of Modal Proposition: Linguistic and Cognitive Aspects ..... 135

*Alla A. Zernetska*
Synergetics of Verbal-Communicative Activity: the Philosophy of System Development in Diachrony ..... 148

# ЗМІСТ

*Бородійчук Н. В.*

Когнітивний механізм аналогії та його роль
у процесах творення первісної метафори ..... 5

*Черхава О. О.*

Реконструкція гіперконцепту НАВЕРНЕННЯ ДО ХРИСТИЯНСЬКОЇ ВІРИ
в англо-, німецько- та україномовних текстах релігійно-популярного дискурсу ..... 19

*Деменчук О. В.*

Моделювання семантики лексики в аспекті міжмовних досліджень ..... 32

*Іваницька Н. Б., Іваницька Н. Л.*

Синтагматичні виміри українських та англійських дієслів:
типологія експлікаторів корелятивності. ..... 43

*Ізюмцева Г. В.*

Реконструкція структури теоконцепту
як багатовимірного утворення матричного формату ..... 57

*Капранов Я. В.*

Діахронічна інтерпретація ностратичного етимона *wol[a]
на основі праіндоєвропейської *(e)wel- (Gr hw- / ew-)
і праалтайської *ulu (~ -o) форм (за версією С. А. Старостіна) ..... 68

*Коломієць О. М.*

Реконструкція образно-стилістичних елементів газетних синоптичних текстів
(на матеріалі англійської, німецької, польської та української мов) ..... 81

*Корольова А. В.*

Комбінаторна синтагматика:
від теорії валентності до теорії концептуальної інтеграції ..... 99

*Леміш Н. Є.*

Інтралінгвальні прототипні характеристики
каузальних домінант у споріднених мовах ..... 112

*Шнуровська Л. В.*

Динаміка семантичної і прагматичної структури
модальної пропозиції: лінгвокогнітивний аспект ..... 135

*Зернецька А. А.*

Синергетика вербально-комунікативної діяльності:
філософія розбудови системи в діахронії ..... 148

# INFORMATION ABOUT AUTHORS


| | |
|---|---|
| ***Nadiya V. Borodiichuk*** | PhD student, National Pedagogical Dragomanov University, Kyiv, Ukraine. E-mail: nadiya_borodiichuk@ukr.net |
| ***Oleh V. Demenchuk*** | Doctor of Sciences (Linguistics), Professor, Rivne State University for the Humanities, Rivne, Ukraine. E-mail: oleh.demenchuk@gmail.com |
| ***Natalia B. Ivanytska*** | Doctor of Sciences (Linguistics), Professor, Vinnytsia Institute of Trade and Economics of Kyiv National University of Trade and Economics, Vinnytsia, Ukraine. E-mail: pyasta3@gmail.com |
| ***Nina L. Ivanytska*** | Doctor of Sciences (Linguistics), Professor, Vinnytsia Mykhailo Kotsiubynskyi State Pedagogical University, Vinnytsia, Ukraine. E-mail: pyasta4@gmail.com |
| ***Ganna V. Izyumtseva*** | Senior Lecturer, National Pedagogical Dragomanov University, Kyiv, Ukraine. E-mail: avizyumtseva@gmail.com |
| ***Yan V. Kapranov*** | Candidate of Sciences (Linguistics), Associate Professor, Kyiv National Linguistic University, Kyiv, Ukraine. E-mail: skinner@ukr.net |
| ***Olena M. Kolomiiets*** | Candidate of Sciences (Linguistics), Associate Professor, Khmelnitskyi Cooperative Trade and Economic Institute, Khmelnitskyi, Ukraine. E-mail: elenakom87@ukr.net |
| ***Alla V. Korolyova*** | Doctor of Sciences (Linguistics), Professor, National Pedagogical Dragomanov University, Kyiv, Ukraine. E-mail: allakor2008@gmail.com |
| ***Nataliya Ye. Lemish*** | Doctor of Sciences (Linguistics), Associate Professor, National Pedagogical Dragomanov University, Kyiv, Ukraine. E-mail: lemish1972@gmail.com |
| ***Olesya O. Cherkhava*** | Doctor of Sciences (Linguistics), Associate Professor, Kyiv National Linguistic University, Kyiv, Ukraine. E-mail: olesya_marchenko@yahoo.com |
| ***Luibov V. Shnurovska*** | Candidate of Sciences (Linguistics), Associate Professor, Postdoc, Kyiv National Linguistic University, Kyiv, Ukraine. E-mail: shnyrovska@ukr.net |
| ***Alla A. Zernetska*** | Doctor of Sciences (Linguistics), Professor, National Pedagogical Dragomanov University, Kyiv, Ukraine. E-mail: alla.zernetskaya@ukr.net |

# ДОВІДКА ПРО АВТОРІВ


| | |
|---|---|
| ***Надія В. Бородійчук*** | аспірант, Національний педагогічний університет імені М. П. Драгоманова, м. Київ, Україна. E-mail: nadiya_borodiichuk@ukr.net |
| ***Олег В. Деменчук*** | доктор філологічних наук, професор, Рівненський державний гуманітарний університет, м. Рівне, Україна. E-mail: oleh.demenchuk@gmail.com |
| ***Наталія Б. Іваницька*** | доктор філологічних наук, професор, Вінницький торговельно-економічний інститут Київського національного торговельно-економічного університету, м. Вінниця, Україна. E-mail: pyasta3@gmail.com |
| ***Ніна Л. Іваницька*** | доктор філологічних наук, професор, Вінницький державний педагогічний університет імені Михайла Коцюбинського, м. Вінниця, Україна. E-mail: pyasta4@gmail.com |
| ***Ганна В. Ізюмцева*** | старший викладач, Національний педагогічний університет імені М. П. Драгоманова, м. Київ, Україна. E-mail: avizyumtseva@gmail.com |
| ***Ян В. Капранов*** | кандидат філологічних наук, доцент, Київський національний лінгвістичний університет, м. Київ, Україна. E-mail: skinner@ukr.net |
| ***Олена М. Коломієць*** | кандидат філологічних наук, доцент, Хмельницький кооперативний торговельно-економічний інститут, м. Хмельницький, Україна. E-mail: elenakom87@ukr.net |
| ***Алла В. Корольова*** | доктор філологічних наук, професор, Національний педагогічний університет імені М. П. Драгоманова, м. Київ, Україна. E-mail: allakor2008@gmail.com |
| ***Наталія Є. Леміш*** | доктор філологічних наук, доцент, Національний педагогічний університет імені М. П. Драгоманова, м. Київ, Україна. E-mail: lemish1972@gmail.com |
| ***Олеся О. Черхава*** | доктор філологічних наук, доцент, Київський національний лінгвістичний університет, м. Київ, Україна. E-mail: olesya_marchenko@yahoo.com |
| ***Любов В. Шнуровська*** | кандидат філологічних наук, доцент, докторант, Київський національний лінгвістичний університет, м. Київ, Україна. E-mail: shnyrovska@ukr.net |
| ***Алла А. Зернецька*** | доктор філологічних наук, професор, Національний педагогічний університет імені М. П. Драгоманова, м. Київ, Україна. E-mail: alla.zernetskaya@ukr.net |

*Наукове видання*

# НАУКОВИЙ ЧАСОПИС
# НАЦІОНАЛЬНОГО ПЕДАГОГІЧНОГО УНІВЕРСИТЕТУ ІМЕНІ М. П. ДРАГОМАНОВА

## *Серія 9. Сучасні тенденції розвитку мов*

*Випуск 17*

Друкується в авторській редакції з оригінал-макетів авторів.
Матеріали подані мовою оригіналу

Автори опублікованих матеріалів несуть повну відповідальність за підбір, точність наведених фактів, цитат, економіко-статистичних даних, власних імен та інших відомостей.


**Відповідальний редактор – А. В. Корольова**
**Відповідальний секретар – Я. В. Хижун**
**Технічний редактор – Л. М. Прокопець**
**Оригінал-макет – Т. С. Меркулова**

Підписано до друку *26 червня* 2018 р.
Формат 60х84. Папір офісний. Гарнітура Times New Roman.
Ум. др. аркушів 21,5. Обл.-вид. арк. 15,25. Наклад 300.
Віддруковано з оригіналів

**Видавництво**
Національного педагогічного університету імені М. П. Драгоманова
01601, м. Київ-30, вул. Пирогова, 9.
Свідоцтво про реєстрацію ДК № 1101 від 29.10.2002 (044) 234-75-87
Продажу не підлягає!

*Scientific Edition*

# SCIENTIFIC JOURNAL
## OF NATIONAL PEDAGOGICAL DRAGOMANOV UNIVERSITY

***Series 9. Current Trends in Language***

*Vol. 17*

Printed in the author's wording from the author's original layouts.
The materials are in the source language

The authors of the published materials are fully responsible for the selection, accuracy of the given facts, quotations, economic-statistical data, own names and other information.

**Editor-in-Chief – A. V. Korolyova**
**Executive Secretary – Ya. V. Khyzhun**
**Technical Secretary – L. M. Prokopets**
**Original layout – T. S. Merkulova**

Signed for print in *June 26,* 2018
Format 60x84. Office paper. Font Times New Roman.
Probation print sheet 21,5. Accounting issued ff. 15,25. Circulation 300.
Printed from the originals

**Publishing House**
**of National Pedagogical Dragomanov University**
01601, Kyiv-30, Pyrogova Str., 9.
Certificate for Registration ДК No. 1101 dated of October 29, 2002 (044) 234-75-87
Not for sale!